WHAT ARE THE PROSPECTS? WHAT ARE THE COSTS?: OVERSIGHT OF MISSILE DEFENSE (PART 2)

HEARING

BEFORE THE

SUBCOMMITTEE ON NATIONAL SECURITY AND FOREIGN AFFAIRS

OF THE

COMMITTEE ON OVERSIGHT AND GOVERNMENT REFORM

HOUSE OF REPRESENTATIVES

ONE HUNDRED TENTH CONGRESS

SECOND SESSION

APRIL 16, 2008

Serial No. 110–149

Printed for the use of the Committee on Oversight and Government Reform

Available via the World Wide Web: http://www.gpoaccess.gov/congress/index.html
http://www.oversight.house.gov

U.S. GOVERNMENT PRINTING OFFICE

48–660 PDF WASHINGTON : 2009

For sale by the Superintendent of Documents, U.S. Government Printing Office
Internet: bookstore.gpo.gov Phone: toll free (866) 512–1800; DC area (202) 512–1800
Fax: (202) 512–2104 Mail: Stop IDCC, Washington, DC 20402–0001

COMMITTEE ON OVERSIGHT AND GOVERNMENT REFORM

HENRY A. WAXMAN, California, *Chairman*

EDOLPHUS TOWNS, New York
PAUL E. KANJORSKI, Pennsylvania
CAROLYN B. MALONEY, New York
ELIJAH E. CUMMINGS, Maryland
DENNIS J. KUCINICH, Ohio
DANNY K. DAVIS, Illinois
JOHN F. TIERNEY, Massachusetts
WM. LACY CLAY, Missouri
DIANE E. WATSON, California
STEPHEN F. LYNCH, Massachusetts
BRIAN HIGGINS, New York
JOHN A. YARMUTH, Kentucky
BRUCE L. BRALEY, Iowa
ELEANOR HOLMES NORTON, District of Columbia
BETTY MCCOLLUM, Minnesota
JIM COOPER, Tennessee
CHRIS VAN HOLLEN, Maryland
PAUL W. HODES, New Hampshire
CHRISTOPHER S. MURPHY, Connecticut
JOHN P. SARBANES, Maryland
PETER WELCH, Vermont

TOM DAVIS, Virginia
DAN BURTON, Indiana
CHRISTOPHER SHAYS, Connecticut
JOHN M. MCHUGH, New York
JOHN L. MICA, Florida
MARK E. SOUDER, Indiana
TODD RUSSELL PLATTS, Pennsylvania
CHRIS CANNON, Utah
JOHN J. DUNCAN, JR., Tennessee
MICHAEL R. TURNER, Ohio
DARRELL E. ISSA, California
KENNY MARCHANT, Texas
LYNN A. WESTMORELAND, Georgia
PATRICK T. MCHENRY, North Carolina
VIRGINIA FOXX, North Carolina
BRIAN P. BILBRAY, California
BILL SALI, Idaho
JIM JORDAN, Ohio

PHIL SCHILIRO, *Chief of Staff*
PHIL BARNETT, *Staff Director*
EARLEY GREEN, *Chief Clerk*
DAVID MARIN, *Minority Staff Director*

SUBCOMMITTEE ON NATIONAL SECURITY AND FOREIGN AFFAIRS

JOHN F. TIERNEY, Massachusetts, *Chairman*

CAROLYN B. MALONEY, New York
STEPHEN F. LYNCH, Massachusetts
BRIAN HIGGINS, New York

CHRISTOPHER SHAYS, Connecticut
DAN BURTON, Indiana
JOHN M. MCHUGH, New York
TODD RUSSELL PLATTS, Pennsylvania

DAVE TURK, *Staff Director*

CONTENTS

	Page
Hearing held on April 16, 2008	1
Statement of:	
Gronlund, Lisbeth, Ph.D., senior scientist and co-director of the global security program, Union of Concerned Scientists, research affiliate, Program on Science, Technology and Society, Massachusetts Institute of Technology; Richard L. Garwin, Ph.D., fellow emeritus, Thomas J. Watson Research Center, IBM Corp.; Jeff Kueter, president, George C. Marshall Institute; and Philip E. Coyle III, senior advisor, Center for Defense Information, associate director emeritus, Lawrence Livermore National Laboratory	12
Coyle, Philip E.	51
Garwin, Richard L.	22
Gronlund, Lisbeth	12
Kueter, Jeff	38
Letters, statements, etc., submitted for the record by:	
Coyle, Philip E., III, senior advisor, Center for Defense Information, associate director emeritus, Lawrence Livermore National Laboratory, prepared statement of	54
Garwin, Richard L., Ph.D., fellow emeritus, Thomas J. Watson Research Center, IBM Corp., prepared statement of	25
Gronlund, Lisbeth, Ph.D., senior scientist and co-director of the global security program, Union of Concerned Scientists, research affiliate, Program on Science, Technology and Society, Massachusetts Institute of Technology, prepared statement of	16
Kueter, Jeff, president, George C. Marshall Institute, prepared statement of	41
Shays, Hon. Christopher, a Representative in Congress from the State of Connecticut:	
Information concerning testing history	116
Prepared statement of	3
Tierney, Hon. John F., a Representative in Congress from the State of Massachusetts, prepared statement of	8

WHAT ARE THE PROSPECTS? WHAT ARE THE COSTS?: OVERSIGHT OF MISSILE DEFENSE (PART 2)

WEDNESDAY, APRIL 16, 2008

HOUSE OF REPRESENTATIVES,
SUBCOMMITTEE ON NATIONAL SECURITY AND FOREIGN AFFAIRS,
COMMITTEE ON OVERSIGHT AND GOVERNMENT REFORM,
Washington, DC.

The subcommittee met, pursuant to notice, at 3:35 p.m., in room 2157, Rayburn House Office Building, Hon. John F. Tierney (chairman of the subcommittee) presiding.

Present: Representatives Tierney, Lynch, Yarmuth, Welch, Shays, Foxx, and Franks.

Staff present: Dave Turk, staff director; Davis Hake, clerk; Dan Hamilton, fellow; Christopher Bright, minority professional staff member; Nick Palarino, minority senior investigator and policy advisor; Benjamin Chance, minority clerk; and Todd Greenwood, minority research assistant.

Mr. TIERNEY. A quorum is now present. The Subcommittee on National Security and Foreign Affairs hearing entitled, "What are the Prospects? What are the Costs?: Oversight of Missile Defense (Part 2)," will come to order.

I ask unanimous consent that only the chairman and the ranking member of the subcommittee be allowed to make opening statements. And I ask unanimous consent that the gentleman from Arizona, Congressman Trent Franks, be allowed to participate in this hearing.

Without objection, so ordered.

I ask unanimous consent that the hearing record be kept open for 5 business days so that all members of the subcommittee will be allowed to submit a written statement for the record.

And, without objection, that is so ordered.

I want to extend my sincere apologies to all of the witnesses. They are substantial people who we invite to come and work with us and tell us what knowledge you have and then we have a circumstance like that extended period of votes. So I hope you will accept our profound apologies and know that we appreciate your being here and helping the committee out.

We are going to go out of order here, because Mr. Shays has to make a brief stop elsewhere. So I have asked Mr. Shays to please do his opening remarks, and that will be followed by mine.

Mr. Shays, you are recognized.

Mr. SHAYS. Thank you, Mr. Chairman, for scheduling this hearing today and continuing the subcommittee's oversight of this important topic. And thank you for your courtesy for allowing me to go out of order and make a statement first.

In September 2000, our subcommittee held a hearing entitled, "National Missile Defense: Test Failures and Technology Development," on precisely the issues we will examine today. In July 2002, our subcommittee held a hearing entitled, "Missile Defense: A New Organization, Evolution, Technologies, and Unrestricted Testing," on required knowledge for missile defense development.

Many of us forget that the National Missile Defense Act of 1999 states, "It is the policy of the United States to deploy as soon as technologically possible an effective national missile defense system capable of defending the United States against limited ballistic missile attacks."

Adopted with broad bipartisan support and signed into law by a Democratic President, the statute answered the question of whether to deploy a missile defense shield. Its decision was supported by the current administration and has also been endorsed by Congress in the fiscal year 2008 National Defense Authorization Act.

The question now is not if but, rather, how to deploy a national missile defense. Without doubt, this is an extremely complex technical challenge. It literally is rocket science and demands an unparalleled degree of technological precision. The challenges missile defense must reliably solve include launch determination, target discrimination, command and control coordination, and target interception. With such daunting demands, one can only expect the program to progress unevenly and experience a certain degree of setback.

We are here to look at the technical process of the progress of the program since those hearings. Over the past decade, Congress has appropriated a great deal of money to missile defense. While acknowledging the difficulty of the task, we must still ensure progress is being made. Perfection is not expected, but significant progress has to be. If there are significant problems and delays, we must consider modifying the program.

I understand we have already fielded an initial capacity to defend the United States and our allies against ballistic missile attacks. This is exactly the type of progress I look for, as we were far from such progress in the hearings I held into the matters as chairman of the subcommittee in 2002. I am interested to hear from our witnesses what problems remain that prevent us from fully deploying a capable and reliable system.

I thank our witnesses for their time today. I look forward to their testimony. And I apologize that I will be leaving for a short period, but I intend to come back.

Thank you, Mr. Chairman.

[The prepared statement of Hon. Christopher Shays follows:]

HENRY A. WAXMAN, CALIFORNIA
CHAIRMAN

TOM DAVIS, VIRGINIA
RANKING MINORITY MEMBER

ONE HUNDRED TENTH CONGRESS

Congress of the United States
House of Representatives
COMMITTEE ON OVERSIGHT AND GOVERNMENT REFORM
2157 RAYBURN HOUSE OFFICE BUILDING
WASHINGTON, DC 20515–6143

Majority (202) 225-5051
Minority (202) 225-5074

What are the Prospects, What are the Costs? Oversight of Missile Defense (Part 2)
Subcommittee on National Security & Foreign Affairs
Wednesday, April 16, 2008

Ranking Member Christopher Shays
Opening Statement

Thank you, Mr. Chairman for scheduling this hearing today and continuing the Subcommittee's oversight of this important topic.

In September 2000 our Subcommittee held a hearing entitled "National Missile Defense: Test Failures and Technology Development," on precisely the issues we will examine today.

And in July 2002 our Subcommittee held a hearing entitled "Missile Defense: A New Organization, Evolutionary Technologies and Unrestricted Testing," on the required knowledge for missile defense development.

Many of us forget that the National Missile Defense Act of 1999 states, "It is the policy of the United States to deploy as soon as is technologically possible an effective National Missile Defense system capable of defending the United States against limited ballistic missile attack."

Adopted with broad bipartisan support and signed into law by a Democratic president, the statute answered the question of whether to deploy a national missile shield. This decision was supported by the current administration, and has also been endorsed by Congress in the FY 08 National Defense Authorization Act.

The question now is, not if, but rather how to deploy a national missile defense. Without doubt, this is an extremely complex technical challenge. It literally is rocket science and demands an unparalleled degree of technological precision.

The challenges missile defense must reliably resolve include launch determination, target discrimination, command and control coordination, and target interception. With such daunting demands, one can only expect the program to progress unevenly and experience a certain degree of setbacks.

We are here to look at the technical progress of the program since those hearings. Over the past decade Congress has appropriated a great deal of money to missile defense. While acknowledging the difficulty of the task, we must still ensure progress is being made. Perfection is not expected, but significant progress is.

If there are significant problems and delays, we must consider modifying the program.

I understand we have already fielded an initial capacity to defend the United States and our allies against ballistic missile attacks. This is exactly the type of progress I look for, as we were far from such progress in the hearings I held into the matter as Chairman of this Subcommittee in 2002.

I am interested to hear from our witnesses what problems remain that prevent us from fully deploying a capable and reliable system. I thank our witnesses for their time today and I look forward to their testimony.

Mr. TIERNEY. Thank you, Mr. Shays.

And thank you all again for being here. I am sorry Mr. Shays won't be here for your opening remarks, but I am sure we will cover it in terms of questions. The questions of whether we have an effective system, one that is capable of defending this country, of course, are huge. I don't think it meant that we would have a policy that we would buy before we fly, nor does it mean that we are going to have a policy that would waste money. And I think all of those questions are open, as is what the word "fielded" means in terms of what capacity is out there now.

But this is, in fact, our second oversight hearing of this series this year. I was present for the earlier hearings Mr. Shays referenced, and I think we had the same questions then as we have now.

We are going to continue this extensive and sustained oversight of missile defense for three primary reasons.

First, the Missile Defense Agency operates the largest research and development program in the Department of Defense, consisting currently of about $10 billion a year. Since the 1980's, this is a program that has already cost $120 billion by some estimates, $150 billion or more by other estimates. As some have pointed out, this is an amount of time and money already exceeding what we spent on the Manhattan Project or the Apollo program, and there is no end in sight.

Second, the broader history of missile defense efforts teaches us a number of important lessons. The nonpartisan Congressional Research Service put it this way: "Efforts to counter ballistic missiles have been underway since the dawn of the missile age at the close of World War II. Numerous programs were begun, and only a very few saw completion to deployment. Technical obstacles have proven to be tenacious, and systems integration challenges have been more the norm, rather than the exception."

The third reason for doing these hearings is the excellent analysis and work of those who are testifying before us today and who have testified at our previous hearings and others like them who have raised very serious concerns about the efficiency, effectiveness, and even the need for our country's current missile defense efforts.

In our first hearing, we had an extraordinary discussion about the hard realities of the threats facing our country from intercontinental ballistic missiles versus other vulnerabilities that we face, a discussion which should form the foundation for any wise policymaking but that too often gets forgotten, ignored, distorted or manipulated.

Now, we will tackle head-on the questions of what are the prospects of our current missile defense efforts and at what cost. We have the very good fortune today to host some of the Nation's finest minds and top experts on the subject of missile defense. We have a group of people who have literally devoted their lives to understanding these problems, who are far more familiar with these issues than anyone in the world. And I am honored to have them here today and eagerly await our discussion this afternoon.

When we talk about prospects of missile defense, a number of issues come up that we will hear extensively discussed today, for

instance: the realism of the testing regime, the pace of testing, fundamental physics constraints, and a mind-numbing variety of technical challenges, just to name a few.

One problem that comes up again and again is the use of countermeasures. The analysis holds that a country sophisticated enough to build an intercontinental ballistic missile with a miniaturized nuclear warhead, an effort that we learned from the Congressional Research Service at our first hearing was truly extraordinary, would also develop countermeasures that could pose fundamental problems for any national missile defense system.

As was pointed out by at least a couple witnesses today, the CIA itself has acknowledged the wide potential use of countermeasures. The 1999 National Intelligence Estimate concludes, and it is up on the screen for those who want to read it along: "We assess that countries developing ballistic missiles will also develop various responses to U.S. theater and national defenses. Russia and China each have developed numerous countermeasures and probably are willing to sell the requisite technologies. Many countries, such as North Korea, Iran and Iraq probably would rely initially on readily available technology—including separating RVs, spin-stabilized RVs, RV reorientation, radar absorbing material, booster fragmentation, low-power jammers, chaff, and simple (balloon) decoys—to develop penetration aids and countermeasures. These countries could develop countermeasures based on these technologies by the time they flight test their missiles."

So our simple question for our panel today is, taking this into account, what are the prospects of success of our current missile defense system, and how likely are we going to be able to overcome this fundamental problem in the foreseeable future?

The Missile Defense Agency was born at the moment the Anti-Ballistic Missile Treaty between the United States and Russia was killed. Defense Secretary Rumsfeld promptly exempted this new agency from normal acquisition, testing and reporting requirements, and the agency went down a path of so-called spiral development that has been carried out, in the words of one of our witnesses today, to an "unworkable extreme."

A number of our witnesses today will point out the consequences of this, including that we have an incredibly opaque system and one in which accountability and transparency are greatly sacrificed.

The Congressional Budget Office has estimated that, assuming the Missile Defense Agency continues on its present course, the taxpayers will spend an additional $213 billion to $277 billion between now and 2025. The graphic on the screen reflects that. I need to stress that this is in addition to the $150 billion we have already spent.

In a time of economic hardship, budget deficits and many pressing and expensive challenges, both foreign and domestic, we need to ask ourselves, whether a conservative Republican or a liberal Democrat: Are we wisely spending the taxpayers' money here? Is there a real threat we are trying to guard against? And are we actually going to have something useful at the end of the day? That is why we are here today, and that is why we are having this hearing.

And, again, I want to thank the witnesses.

[The prepared statement of Hon. John F. Tierney follows:]

FROM THE OFFICE OF JOHN F. TIERNEY
Representing Massachusetts's 6th District

For Immediate Release
April 16, 2008

Contact: Catherine Ribeiro
(202) 225-8020

NATIONAL SECURITY SUBCOMMITTEE HEARING
"What Are the Prospects, What Are the Costs?: Oversight of Missile Defense (Part II)"

WASHINGTON, DC — Today, the Subcommittee on National Security and Foreign Affairs heard testimony on the operational, accountability, and fiscal history of the nation's ballistic missile defense program, and how that history informs our expectations of future costs and performance should Congress decide on continuing forward with this program. This hearing was the second in a series examining our country's efforts on missile defense, a weapons development and acquisition commitment that has cost, by Congressional Research Service estimate, over $120 billion over the past 25 years.

A copy of Chairman Tierney's opening statement as prepared for delivery is below:

Statement of Chairman John F. Tierney

Subcommittee on National Security and Foreign Affairs

"What are the Prospects, What are the Costs?:
Oversight of Missile Defense (Part 2)"

As Prepared for Delivery

April 16, 2008

Good afternoon, and welcome to you all.

Thank you for being here today, as the Subcommittee on National Security and Foreign Affairs holds the second oversight hearing in our series on the nation's missile defense program.

This Subcommittee is undertaking this extensive and sustained oversight of missile defense for three primary reasons.

First, the Missile Defense Agency operates the largest research development program in the Department of Defense, consisting currently of about $10 billion a year. Since the

1980s, this is a program that has already cost $120 to $150 billion or more. As some of have pointed out, this is an amount of time and money already exceeding what we spent on the Manhattan project or the Apollo program, and there is no end in sight.

Second, the broader history of missile defense efforts teaches us a number of important lessons. The nonpartisan Congressional Research Service put it this way:

[E]fforts to counter ballistic missiles have been underway since the dawn of the missile age at the close of World War II. Numerous programs were begun, and only a very few saw completion to deployment. Technical obstacles have proven to be tenacious, and systems integration challenges have been more the norm, rather than the exception.

Third, the excellent analysis and work of those who are testifying today and at our previous hearing – and others like them – have raised very serious concerns about the efficiency, effectiveness, and even the need for our country's current missile defense efforts.

At our first hearing, we had an extraordinary discussion about the hard realities of the threats facing our country from intercontinental ballistic missiles versus other vulnerabilities we face – a discussion which should form the foundation for any wise policy making, but that too often gets ignored, distorted, or manipulated.

Now, we will tackle head-on the questions of what are the prospects of our current missile defense efforts and at what costs. We have the very good fortune today to host some of our nation's finest minds and top experts on the subject of missile defense. We have a group of people who have literally devoted their lives to understanding these problems, who are more familiar with these issues than anyone in the world, and I am honored to have them here and eagerly await our discussion this afternoon.

When we talk about prospects of missile defense, a number of issues come up that we'll hear extensively discussed today, for instance, the realism of the testing regime; the pace of testing; fundamental physics constraints; and a mind-numbing variety of serious technical challenges, just to name a few.

One problem, in particular, that comes up again and again is the use of countermeasures. The analysis holds that a country sophisticated enough to build an intercontinental ballistic missile with a miniaturized nuclear warhead – an effort that we learned from the Congressional Research Service at our first hearing that was truly "extraordinary" – would also develop countermeasures that could pose fundamental problems for any missile defense system.

As will be pointed out by at least a couple of our witness today, the CIA itself has acknowledged the wide, potential use of countermeasures.

The 1999 National Intelligence Estimate concludes, and I quote:

We assess that countries developing ballistic missiles would also develop various responses to U.S. theatre and national defenses. Russia and China each have developed numerous countermeasures and probably are willing to sell the requisite technologies.

Many countries, such as North Korea, Iran, and Iraq probably would rely initially on readily available technology – including separating RVs, spin-stabilized RV's , RV reorientation, radar absorbing material, booster fragmentation, low-power jammers, chaff, and simple (balloon) decoys – to develop penetration aids and countermeasures.

These countries could develop countermeasures based on these technologies by the time they flight test their missiles.

My simple question for our panel today is, taking this into account, what are the prospects of success of our current missile defense system and how likely are we going to be able to overcome this fundamental problem in the foreseeable future?

The Missile Defense Agency was born at the moment the Anti-Ballistic Missile Treaty between the U.S. and Russia was killed. Defense Secretary Rumsfeld promptly exempted this new agency from normal acquisition, testing, and reporting requirements, and the agency went down a path of "spiral development" that has been carried out, in the words of one of our witnesses today, to an, and I quote, "unworkable extreme."

A number of our witnesses today will point out the consequences of this, including that we have an incredibly opaque system, and one in which accountability and transparency are greatly sacrificed.

The Congressional Budget Office has estimated that assuming the Missile Defense Agency continues on its present course, the taxpayers will spend an additional $213 to $277 billion dollars between now and 2025. I need to stress that this is in addition to the $150 billion we have already spent.

In a time of economic hardship, budget deficits, and many pressing and expensive challenges – both foreign and domestic – we need to all ask ourselves – whether you're a conservative Republican or a liberal Democrat – are we wisely spending the taxpayer's money here; is there a real threat we are trying to guard against; and are we actually going to have something useful at the end of the day?

That is why we are here today. I now yield to our Ranking Member, Mr. Shays.

-30-

Mr. TIERNEY. The subcommittee will now receive the testimony from the witnesses that are before us today.

By brief introduction, Dr. Lisbeth Gronlund—Dr. Gronlund is a senior scientist and co-director of the Global Security Program at the Union of Concerned Scientists and a research affiliate in the Program on Science, Technology, and Society at the Massachusetts Institute of Technology.

She holds a Ph.D. in theoretical physics from Cornell University. Her research is focused on technical issues related to nuclear terrorism and fissile material controls, the U.S. nuclear weapons policy and new nuclear weapons, space weapons, and ballistic missile defenses.

She has published widely in scientific and policy journals, given numerous talks about nuclear arms control and missile defense policy issues to both lay and expert audiences, and testified previously before Congress, including to this committee, and we welcome her back.

Dr. Richard Garwin—Dr. Garwin is one of the world's most eminent physicists and a long-time scholar of missile defense. After working with Dr. Edmund Teller on the creation of the hydrogen bomb, Dr. Garwin left the University of Chicago to join IBM Corp. in 1952, where he remains fellow emeritus in the Thomas J. Watson Research Center in New York.

He is a founder of the modern U.S. Satellite Intelligence Program, and has advised Presidents and Congress on matters of national security his entire career, including 8 years as chairman of the Arms Control and Nonproliferation Advisory Board of the Department of State.

He is the recipient of many national and international honors, including being awarded in 2003 the National Medal of Science from the President of the United States. He has been professor of public policy at the Kennedy School of Government at Harvard University, has published more than 500 scientific papers, and holds 45 U.S. patents.

Jeff Kueter is the president of George C. Marshall Institute in Washington, DC. He focuses on the issues of national security and the environment. Mr. Kueter also manages the day-to-day operations of the George C. Marshall Institute, authoring its policy papers and analysis and engaging the public and the policymaking community.

He received his bachelor's of arts with honors in political science and economics at the University of Iowa, and a master's degree in political science and another master's of security policy studies in science and technology studies, both from George Washington University. He has served as research director at the National Coalition for Advanced Manufacturing and at the Washington Nickleby Consultants.

Philip E. Coyle III—Mr. Coyle is a senior advisor to the Center for Defense Information. A former Assistant Secretary of Defense, Mr. Coyle is the longest-serving director of operational tests and evaluation in the 20-year history of that office. He oversaw the test and evaluation of over 200 major defense acquisition systems and reported to the Secretary of Defense and to Congress on the adequacy and results of Defense Department testing programs.

He is the associate director emeritus at the Lawrence Livermore National Laboratory, where he started in 1959. He was appointed by President George W. Bush to serve on the 2005 Defense Base Realignment and Closure Commission.

Mr. Coyle is an expert on military research, development and testing, on operational military matters, and on national security policy and defense spending, including defense acquisition reform and defense procurement. He has an extensive background in missile defense, in military defense systems and in nuclear weapons.

The subcommittee again thanks all of you for being with us here today. Your decades of experience and firsthand knowledge of the topics will provide us with an unparalleled independent view into these complex issues.

It is the policy of the subcommittee to swear you in before you testify. I would ask you if you would stand and raise your rights hands, please.

[Witnesses sworn.]

Mr. TIERNEY. The record will please reflect that all the witnesses answered in the affirmative.

Your full written statements will be put into the hearing record, by unanimous consent.

We normally would ask you to keep your oral statements to 5 minutes in duration, but I think you have agreed to follow along with the matter, and we are going to be as lenient as we possibly can. We want to hear what you have to say. We will take your testimony. If it gets to be a little too long, I will try to just tap on the gavel a little bit and maybe you can bring it to a conclusion.

Otherwise, we, again, thank you. And let's start, if we can, with Lisbeth Gronlund.

Your testimony, please.

STATEMENTS OF LISBETH GRONLUND, PH.D., SENIOR SCIENTIST AND CO-DIRECTOR OF THE GLOBAL SECURITY PROGRAM, UNION OF CONCERNED SCIENTISTS, RESEARCH AFFILIATE, PROGRAM ON SCIENCE, TECHNOLOGY AND SOCIETY, MASSACHUSETTS INSTITUTE OF TECHNOLOGY; RICHARD L. GARWIN, PH.D., FELLOW EMERITUS, THOMAS J. WATSON RESEARCH CENTER, IBM CORP.; JEFF KUETER, PRESIDENT, GEORGE C. MARSHALL INSTITUTE; AND PHILIP E. COYLE III, SENIOR ADVISOR, CENTER FOR DEFENSE INFORMATION, ASSOCIATE DIRECTOR EMERITUS, LAWRENCE LIVERMORE NATIONAL LABORATORY

STATEMENT OF LISBETH GRONLUND

Ms. GRONLUND. I thank you very much for inviting me here today, and I applaud the committee for taking up this issue. It is a very important one that I think requires more oversight.

I will first discuss the prospects for building a ballistic missile defense and some of the security costs that have ensued from efforts.

As you know, last month marked the 25th anniversary of Reagan's famous Star Wars speech in which he announced his plan to develop a missile defense system that would make nuclear weapons impotent and obsolete. His vision of a shield that would protect us

from nuclear missiles just as a roof protects a family from rain was very compelling to many people. I think it is a vision that remains compelling today. This was a time when the United States and Soviets had 25,000 missiles and 35,000 missiles, and we could see it was particularly appealing then.

The task now, defending against potential future North Korean or Iranian long-range missiles, is far less demanding. Anti-missile technology has also come a long way in the past 25 years. Guidance and homing have improved so much that all current U.S. missile defense systems use hit-to-kill technology, where the incoming target is destroyed by ramming into it. Twenty-five years ago, our missile defenses were nuclear-tipped, because you couldn't possibly get close enough to the incoming target.

However, despite this technical progress, the United States is no closer today than it was 25 years ago to be able to defend against long-range missiles. As you yourself noted, there will be a lot of discussion today about the perennial countermeasures problem as well as the lack of testing.

As you will hear all three of us articulate, this issue of countermeasures, steps that a nation would then take to counter a U.S. defense system, is really at the core of why we will not be able to build an effective defense. There I believe Phil will talk in more detail about different kinds of countermeasures.

Now, I believe that an independent panel of people who have technical expertise should have been convened at the beginning of this program where they would do a big-picture review, but it is not too late to do a review like this now.

The members of such a panel should not be chosen on a partisan basis. I know often Congress appoints committees and the Democrats choose half of the members of the committee and the Republicans choose the other half. I don't think this is the right approach. I think a group like the JASON Group would be ideal to look at this from a very fundamental point of view.

In other words, to use the analogy that the Missile Defense Agency uses, is it possible for this system ever to run? Because if it is not, it is pointless to spend money trying to get it to crawl.

I want to suggest some other things that Congress could do to better understand the limitations of this system. I think it is important that the committee look into the testing plans for the ground-based missile defense system. When does MDA plan to test against a threat using realistic countermeasures, and what are those countermeasures? When does MDA plan to test against a tumbling warhead?

In this regard, it would be useful for Congress to require the Missile Defense Agency to set up a red team to prevent superpower agents that would be within the capability of a nation who could build a long range-missile and a nuclear warhead.

I think an independent panel is also needed to provide ongoing peer review, technical peer review, of the program as it moves forward, if it moves forward. And, again, I think it should be a panel that is nonpartisan, not bipartisan.

For example, one of the initial tests was a so-called fly by test. There was no team at an intercept. It was simply a test of the sensors on the kill vehicle. It flew by a number of objects of different

sizes and shapes, and its task was to see if it could pick out the warhead. There have been lots of questions and concerns raised about that test, whether in fact it demonstrated anything. This was a proof-of-concept test. It is still important to understand what really happened then.

Another issue that merits some consideration on the part of the committee is the capability of the radar that the United States wants to deploy in Eastern Europe. There are reasons to believe that the effectiveness of that missile defense system as portrayed by the Missile Defense Agency are inaccurate. And, again, it is something that an independent panel that can do peer review would be really important to have.

Also, until the Missile Defense Agency conducts these tests with realistic countermeasures and demonstrates that there is some potential, Congress should provide no funding to purchase and deploy additional interceptors or radars.

So, let me turn now to the costs. I know many people talk about monetary costs. I think, while those are large, I think the more significant costs are those to U.S. security.

Many people find a contradiction between my statement that the missile defense system is not, cannot, will not be effective, and yet at the same time it will cost other countries who believe it to be effective to react in a way that undermines U.S. security. And let me just address that directly.

Other countries and the United States engage in worst-case analysis when they are making military plans. That is their job. So when they look at what the United States is doing, they assume that it will work. They also assume that if we are spending this much money, that we think it will work. And those military planners then decide what to do with their nuclear weapons and their long-range missiles.

And this has been the essential problem for decades. This is why the United States and Soviet Union signed the Anti-Ballistic Missile Treaty. They both came to understand that trying to build defenses would cause the other nation to add missiles, to do something to counter the defense, and they realized this would be a bad deal for both nations.

Now, we see that, in perhaps a less severe form, the United States is interested in deploying a radar and interceptors in Eastern Europe. Russia is very unhappy about this. It turns out that the only threat to the United States that could really destroy our nation as a functioning society is the Russian missile arsenal, nuclear weapons arsenal. And one reason that is so is that they deploy more than 1,000 of their nuclear armed missiles on high alert, as does the United States. What this means is that those missiles are vulnerable to accidental use, to unauthorized use, or to deliberate use but under mistaken assumptions that Russia is under attack by the United States. Basically, when you have weapons ready to go, you have less control over them.

Back when President Clinton was trying to negotiate the treaty with Russia, U.S. negotiators explicitly told the Russians that they should not worry about a missile defense system because they could always maintain their missiles on launch-on-warning. That way, they would not need to worry about an incoming U.S. attack

that would destroy a good fraction of Russian missiles, and then the rest of them being knocked down by a missile defense system. We should not want to encourage Russia to maintain its missile defense on launch-on-warning.

Similarly, China has about 20 long-range missiles. You can see that the intended size of this missile defense system would be a concern to China. They have had a very modest nuclear weapons program. We also do not want to give them a reason to increase their arsenal.

Finally, it is dangerous if U.S. policymakers believe they have a military capability that they do not have. Recently, President Bush indicated that, had North Korea's missile test been successful, had it been launched at the United States, that we could simply have shot it down. This is very dangerous, and the Missile Defense Agency, I believe, has been less than honest about what the true capabilities of the system are. It leads policymakers to not fully understand the limitations of the system. They might, for example, be less interested in negotiating with countries that might build long-range missiles. They might be more willing to take provocative military action.

So those are, I believe, the biggest costs. Those are security costs, security costs to the United States.

I want to end up by simply summarizing. The ground-based missile defense program offers no prospect of defending the United States from long-range missiles and undermines efforts to eliminate the real nuclear threats to the United States.

Thank you very much.

[The prepared statement of Ms. Gronlund follows:]

U.S. House of Representatives
Committee on Oversight and Government Reform
National Security and Foreign Affairs Subcommittee

Hearing on:
What are the Prospects, What are the Costs?: Oversight of Missile Defense (Part 2)

April 16, 2008

Prepared Testimony of

Lisbeth Gronlund, Ph.D.
Senior Scientist and Co-director, Global Security Program
Union of Concerned Scientists

Thank you for inviting me to testify today. I applaud the committee for taking a hard look at the important issue of defending the United States against long-range missiles.

I will first discuss the prospects of building an effective defense against long-range missiles, and then the security costs to the United States of the systems it has been developing.

What are the Prospects?
As you know, this year marks the 25th anniversary of President Reagan's famous "Star Wars" speech announcing his plan to develop a missile defense system that would make nuclear weapons "impotent and obsolete." His vision of a "shield that could protect us from nuclear missiles just as a roof protects a family from the rain" was appealing to many people. This was a time when the Soviets and the United States possessed 35,000 and 25,000 nuclear weapons, respectively.

The task now—defending against potential future North Korean or Iranian long-range missiles—is far less demanding than defending against thousands of incoming Soviet missiles.

Anti-missile technology has also come a long way in the past 25 years. Guidance and homing have improved so much that all current U.S. missile defense systems use "hit-to-kill" technology intended to destroy the incoming target by ramming into it. Previous defenses against long-range missiles were designed to use nuclear-tipped interceptors to destroy a warhead at a distance.

However, the United States is no closer today to being able to effectively defend against long-range ballistic missiles than it was 25 years ago.

Let's take a clear-eyed look at what 25 years have brought us.

The Pentagon has yet to demonstrate that the U.S. Ground-based Missile Defense (GMD) system is capable of defending against a long-range ballistic missile in a real-world situation. The tests have demonstrated that the kill vehicle is able to home on and collide with an identifiable target, but under highly scripted conditions. A February 2008 Government Accountability Office report concluded that these tests have been "developmental in nature, and do not provide sufficient realism" to assess the system's potential effectiveness.[1]

To permit deployment of the fledgling Ground-based Missile Defense system, the Missile Defense Agency (MDA) has not followed the normal accounting and testing procedures that apply to all other weapons systems. For example, the system does not comply with the "fly before you buy" law, designed to prevent the military from purchasing weapons that are unsuitable for their real-world mission or do not work as intended. Under this law, a major defense program may not produce more than a small number of weapons—generally for testing purposes—until the Pentagon's director of operational testing and evaluation issues a report stating whether the testing and evaluation was adequate and whether the results show that the weapon system is effective and suitable for combat. That will not be possible until the Pentagon conducts realistic tests, and that may be many years from now, if ever.

---

[1] GAO, "Assessment of DOD Efforts to Enhance Missile Defense Capabilities and Oversight," February 26, 2008. www.gao.gov/new.items/d08506t.pdf

To circumvent the rules, the MDA refers to the Ground-based Missile Defense components as "fielded" rather than "deployed," and has claimed that they are "test assets" used as part of the test program.

Moreover, there is little or no prospect that the United States will develop a defense system that could defend against real-world long-range missiles in the foreseeable future. As a 2000 Union of Concerned Scientists-Massachusetts Institute of Technology technical report, "Countermeasures," concluded, any country with the capability and motivation to build long-range missiles and fire them at the United States also would have the capability and motivation to equip those missiles with effective countermeasures, such as decoys.[2] That report assessed the National Missile Defense (NMD) system being planned at that time. The NMD system was in principle more capable than the GMD system is, since it included space-based infrared sensors as well as ground-based radars, so the conclusion of the report holds for the GMD system as well.

The availability of countermeasures was also discussed in the September 1999 National Intelligence Estimate on "Foreign Missile Developments and the Ballistic Missile Threat to the United States Through 2015," which stated:

> "We assess that countries developing ballistic missiles would also develop various responses to U.S. theater and national defenses. Russia and China each have developed numerous countermeasures and probably are willing to sell the requisite technologies.
>
> "Many countries, such as North Korea, Iran, and Iraq probably would rely initially on readily available technology—including separating RVs, spin-stabilized RVs, RV reorientation, radar absorbing material (RAM), booster fragmentation, low-power jammers, chaff, and simple (balloon) decoys—to develop penetration aids and countermeasures.
>
> "These countries could develop countermeasures based on these technologies by the time they flight test their missiles."

These reports make clear that countermeasures pose a fundamental problem for the GMD system at a conceptual level—not just at the technical level. An independent panel should have conducted a big picture review of the program at its inception, but it is not too late for such a review now. The members of such a panel should not be chosen on a partisan basis, but rather for their expertise and independent-mindedness. The JASON group would be ideal to undertake this task.

As the 1998 Rumsfeld Commission Report on the Ballistic Missile Threat emphasized: absence of evidence is not evidence of absence. It is important to remember that this applies to the development of countermeasures for missiles and not just the missiles themselves.

---

[2] Andy Sessler, et. al., "Countermeasures," (Union of Concerned Scientists, Cambridge MA) April 2000. www.ucsusa.org/global_security/missile_defense/countermeasures.html.

The Missile Defense Agency has still not addressed the countermeasure problem. In Senate testimony on April 1, General Obering stated that MDA "conducted an integrated flight test last September involving a realistic target launched from Alaska." However, the target included no countermeasures; General Obering is apparently defining a "realistic target" as one without countermeasures. General Obering went on to say "While the [GMD] system is developmental, it is available today to our leadership to meet real world threats."

If MDA believes the GMD system has the ability to intercept targets with countermeasures, then it should demonstrate this through rigorous testing. Until then, Congress should provide no funding to purchase and deploy additional interceptors or radars.

It is also important that the Committee look into the current testing plans for the GMD system. When does the MDA plan to test against a threat using realistic countermeasures, and what are these countermeasures? When does MDA plan to test against a tumbling warhead? It would also be useful if Congress required MDA to set up an independent Red Team charged with developing and building simple but realistic countermeasures.

In addition, an independent review panel is also needed to review developments in the GMD system on an ongoing basis. Such a review could examine both past and current issues.

For example, one of the first fly-by tests, IFT-1A, was a "proof-of-concept" test intended to demonstrate that the infrared sensors on the kill vehicle could discriminate the warhead from decoys. However, the discrimination algorithm assumed detailed prior knowledge about the characteristics of the warhead and countermeasures—an unwarranted assumption. There have also been other ongoing questions about this test, which this Committee and an independent panel should look into as well.

A current issue that also merits review by this Committee is the capability of the proposed European Midcourse Radar (EMR). On April 1, in discussing long-range Iranian missiles, General Obering testified that the EMR would "provide critical midcourse tracking data on threats launched out of the Middle East." However, recent technical analysis suggests that the radar's range is too short to provide track data or discrimination for long-range missiles launched from the Middle East toward the United States.

What are the Costs?

The pursuit of missile defenses against long-range missiles has been expensive, and entailed significant opportunity costs. However, the greatest costs are the security costs the United States continues to bear.

First, it is dangerous if military and political leaders believe the GMD system is effective. Such misinformation contributes to bad decision making. For example, if decisionmakers believed that the GMD system could reliably intercept ballistic missiles launched by North Korea, they might be less motivated to pursue diplomatic means to address the North Korean missile program. In a crisis, under the mistaken impression that its missile defenses could reliably stop incoming

missiles, U.S. leaders might take actions that make it more likely that an adversary would launch a missile attack.

It is not difficult to find examples in which the perceptions of high-level policy makers differed starkly from the technical assessment of experts who were more familiar with the details of a situation. A striking example is the explosion of the space shuttle Challenger in 1986. It is clear in retrospect that the technical experts who understood the space shuttle in detail knew that the unusually cold temperatures on the night of the launch represented a significant risk if the launch proceeded. But this was not understood by the high-level officials who made the decision to launch, and the result was disastrous. Some of these officials were certainly influenced by overstated claims of the shuttle's reliability.

Second, as long as the United States and Russia continue to maintain nuclear weapons to deter each other, any U.S. steps to deploy a defense system that Russia believes could intercept a significant number of its survivable long-range missile forces will undermine efforts to reduce nuclear threats. This link between offensive weapons and missile defenses was clearly demonstrated in the 1986 Reykjavik summit meeting, when President Reagan's adherence to missile defense scuttled an opportunity to pursue President Mikhail Gorbachev's offer to negotiate deep cuts in nuclear stockpiles. Ironically, missile defense precluded taking a real step toward achieving Reagan's goal of rendering nuclear weapons obsolete.

Today, the risk of a premeditated Russian or Chinese nuclear attack on the United States is essentially zero. But because Russia continues to maintain more than a thousand nuclear weapons on high alert (as does the United States), ready to be launched within a matter of minutes, there is still a danger of an accidental or unauthorized attack, or of a mistaken launch in response to a false warning. Indeed, such attacks are the only military threats that could destroy the United States as a functioning society.

Russia's incentive to maintain its weapons on alert would be strengthened if it believed the United States was deploying a system that could threaten its ability to retaliate. In fact, when the United States was trying to renegotiate the terms of the ABM treaty in the late 1990s, it argued that Russia need not fear a U.S. defense system as long as it kept its missiles on high alert.

China, meanwhile, has a very small arsenal of roughly 20 long-range missiles that it relies on for deterrence. However, it could decide to offset U.S. defense deployments by increasing its arsenal, which could in turn prompt India and then Pakistan to increase their nuclear arsenals.

On one level, the United States is aware of this linkage. It has stressed that its Ground-based Missile Defense system is intended to protect against potential future threats from developing countries, and has stated that deployments would be "limited" so that Russia and China would not see them as a threat to their nuclear deterrents. However, from Russia's and China's perspective, the issue is whether U.S. actions match its words.

In the coming years, the United States plans to increase the number of interceptors that are capable—at least in principle—of defending against long-range missiles. Congress has allocated funds for 40 Ground-based Missile Defense interceptors, to be deployed in Alaska and

California. The United States is negotiating with Poland and the Czech Republic to deploy an additional 10 Ground-based Missile Defense interceptors and one or two radars in Europe near the Russian border. Russia has strongly objected to this plan.

Within five years, the United States also is slated to deploy some 150 interceptor missiles on 18 ships as part of its Aegis missile defense system, which is designed to defend against intermediate-range ballistic missiles. However, the United States plans to produce an upgraded version of the interceptor to allow the Aegis system to defend against long-range missiles as well. Thus, Russia and China may worry that they could soon face some 200 U.S. interceptors designed to destroy long-range missiles.

Compared with China's 20 long-range nuclear-armed missiles, 200 interceptors constitute a relatively large deployment. While Russia has a far larger arsenal, it may assume that most of it would be destroyed by a U.S. first strike. While the scientists in these countries may understand that these interceptors can be defeated by straightforward countermeasures, worst-case analyses by political and military leaders, as well as a desire to have a visible response for both domestic and international audiences, may prompt both China and Russia to build or retain larger nuclear forces than they otherwise would, and may lead Russia to retain its missiles on high alert.

Again, I appreciate the opportunity to testify on this important issue. In summary, the GMD program offers no prospect of defending the United States from a real-world missile attack, and undermines efforts to eliminate the real nuclear threats to the United States.

Mr. TIERNEY. Thank you very much, Doctor. And we appreciate your testimony and look forward to the questions and answers.

Dr. Garwin, if you might, please.

STATEMENT OF RICHARD GARWIN

Mr. GARWIN. I am Richard Garwin, and the title of my testimony is "Ballistic Missile Defense in Context."

So, first, I want to make some general comments on BMD.

Government programs, especially military programs, should be beneficial. That is, for the most part, they must pass the test of open analysis and not just plausibility. A program that is not effective is like a fraudulent cure for disease; it wastes money, but it also prevents the ill from receiving effective treatment.

This country has a long history of programs attempting to defend against ballistic missiles. Some have made sense even though they were not pursued. Others have been flawed from the outset.

Defending against nuclear weapons and the only other weapon of mass destruction, biological weapons, is extremely desirable, but if wishes were horses, beggars would ride.

Mr. TIERNEY. My father had a different statement, but I think yours is a little cleaner than that.

Mr. GARWIN. The Missile Defense Agency [MDA], has responsibilities and capabilities in addition to its most costly and most publicized one of midcourse intercept of ICBMs from such states as Iran or North Korea. Some of these programs are quite effective, such as the recent demonstration that MDA can destroy low-orbit satellites, which is, however, like shooting ducks in a pond—protected ducks, in fact.

But the primary responsibility, that of protecting the United States against attack by nuclear weapons or biological weapons, is a failure and will remain so for the foreseeable future, so long as MDA attempts to carry it out by midcourse intercept. There are three reasons.

First, a state wishing to deliver nuclear weapons to injure the U.S. homeland would far more likely use short-range ballistic missiles or cruise missiles launched from a ship to attack U.S. coastal cities with nuclear weapons than use an ICBM for that purpose.

Second, if a state did desire to use ICBMs, its delivery of bioweapons would be more effective and impossible to counter by any proposed missiles defense if it used dozens of bomblets each equipped with its own heat shield. Separating as soon as the missile achieved its final speed and course in the vacuum of space, these scores or hundreds of bomblets could not be intercepted individually or collectively by the nonnuclear systems being deployed, and would fall to their targets in an urban area, posing a greater threat of death or disease than a single warhead containing the germs to be delivered.

And, third, should a state be so misguided as to attempt to deliver nuclear weapons by ICBM, they could be guaranteed against intercept in midcourse by the use of appropriate countermeasures. The 1999 National Intelligence Estimate that the chairman displayed judges specifically that Iran or North Korea could have such effective countermeasures by the time of their first ICBM test.

Now, a little bit more detail on each of these points, and then I would welcome questions for discussion.

First, the use of nuclear-armed, short-range, ship-fired missiles. Iran has available Chinese-made HY–2 and C–802 cruise missiles, as well as SCUD-B ballistic missiles with a range of 300 kilometers, 200 miles, and 1-ton payload that could be fired from ships. The United States now has no defense of coastal cities against the launch from a ship of such a missile carrying nuclear or biological warheads.

The 1998 Commission to Assess the Ballistic Missile Threat to the United States stated clearly, the threat from ship-launched ballistic or cruise missiles, validated in 2006 by MDA's chief of analysis and scenarios, as a way in which the adversary could achieve great strength at low cost, in analogy to the IEDs, improvised explosive devices, that are such a threat in Iraq, but in this case to deliver city-destroying nuclear weapons. That was Ben Stubenberg in 2006.

Second, the ICBM with dozens or hundreds of bomblets and re-entry vehicles. ICBM delivery of a warhead containing 500 kilograms of anthrax, a thousand pounds, or smallpox must provide a shield against the heat of re-entry and then a means of aerosolizing the bio agent so that it will remain suspended as it wafts across the city. It would be militarily more effective and, incidentally, proof against intercept by the midcourse interceptors to divide the payload into many few-kilogram bomblets, each with its own heat shield and re-entry vehicle, the bomblets of the design from the U.S. Biological Weapons program in the 1960's, now declassified.

Effective heat shields for re-entry are available from NASA data as described in a 2000 report of which Lisbeth Gronlund and I are co-authors and illustrated in my prepared testimony. So there is a nice little diagram.

Countermeasures to intercept of a nuclear warhead. So the job of the Missile Defense Agency is midcourse intercept of the warheads. Others on this panel will discuss decoys and countermeasures in detail, although I am prepared to answer questions.

Here, I just note that MDA claims now to be able to handle decoys on a few ICBMs launched from Iran or North Korea. But its director, in a 2007 article, writes, "And the Multiple Kill Vehicle System is a generational upgrade to the land- and sea-based midcourse interceptors that will allow us to handle decoys and countermeasures."

But how does a system potentially available in the year 2015 allow us to handle decoys and countermeasures now? This is not reality. A classified technical session devoted to the decoy problem and solutions could bring some assessment of the realistic performance of the system.

So, specifically, here are several questions for the Missile Defense Agency.

First, in the past, defense against ICBM delivery of bio-weapons against U.S. cities was one of the goals promised by National Missile Defense. I remember Director General Kadish promising that. Does MDA now believe that the midcourse defense now deployed has the ability to defend against ICBMs equipped with scores of

bomblets, re-entry vehicles that separate just after boost phase? Does MDA believe that threat is not realistic?

I noticed that MDA no longer promises to defend against the bioweapon and ICBMs. I think that is realism on their part, but they ought to be upfront about it.

Second, in view of the 1999 NIE's judgment that Iran or North Korea would have decoys for their ICBMs by the time of the first flight test, can MDA point to a sound, technical, classified analysis that analyzes the performance of the present MDA deployed system against the suite of decoys stated as credible in the NIE that you saw on the display before, including low-power jammers, chaff, and simple balloon decoys.

Third, in a June 28, 2007, presentation to a European Union body, MDA's executive director assumes, "interceptor launched 250 to 300 seconds after threat." That is 4 minutes to 5 minutes after the ICBM is launched in Russia and is viewed by the infrared warning satellite system.

In one of my papers, and I give the reference, I note that interceptor launched 50 to 100 seconds after threat launch was assumed by a very competent study. MDA's assurance that the interceptors in Poland would not be able to destroy even one Russian ICBM launched against the United States and the assurances of President Bush and Secretary Gates depend on this assumption of a 4- to 5-minute delay, 250- to 300-second delay, in launch of the interceptor. MDA should be requested to explain why an interceptor can't be launched less than 100 seconds after a threat instead of this 250- to 300-second assumed delay.

That completes my prepared testimony, and I would be very happy to answer any questions from the committee.

[The prepared statement of Mr. Garwin follows:]

Ballistic Missile Defense in Context

Richard L. Garwin
IBM Fellow Emeritus*
(* Personal views. Affiliation given for identification only)
Thomas J. Watson Research Center
Yorktown Heights, NY 10598

RLG2 at us.ibm.com, (914) 945-2555, www.fas.org/RLG/

Prepared testimony for the Hearing
"What are the Prospects, What are the Costs?:
Oversight of Missile Defense (Part 2)."
April 16, 2008

Comments on BMD

Government programs, especially military programs, should be beneficial. This means, for the most part, that they must pass the test of open analysis and not just plausibility.

A program that is not effective is like a fraudulent cure for disease—it wastes money, but it also prevents the ill from receiving effective treatment.

This country has a long history of programs attempting to defend against ballistic missiles. Some have made sense (even though they were not pursued); others have been flawed from the onset.

Defending against nuclear weapons and the only other weapon of mass destruction—biological weapons—is extremely desirable, but "If wishes were horses beggars would ride."

The Missile Defense Agency—MDA—has responsibilities and capabilities in addition to its most costly and most publicized one of mid-course intercept of ICBMs from states such as Iran or North Korea. Some of these programs are quite effective, such as the recent demonstration that MDA can destroy low-orbit satellites—which is, however, like shooting ducks in a pond. But the primary responsibility—that of protecting the United States against attack by nuclear weapons or biological weapons is a failure and will remain so for the foreseeable future, so long as MDA attempts to carry it out by mid-course intercept. There are three reasons:

1. A state wishing to deliver nuclear weapons to injure the United States homeland would far more likely use short-range ballistic missiles or cruise missiles launched from a ship to attack U.S. coastal cities with nuclear weapons than use an ICBM for that purpose.
2. If a state did desire to use ICBMs, its delivery of bio-weapons would be more effective and impossible to counter by any proposed missile defense, if it used dozens of "bomblets" each equipped with its own heat shield. Separating as soon as the missile achieved its final speed and course in the vacuum of space, these scores or

hundreds of bomblets could not be intercepted individually or collectively by the non-nuclear systems being deployed, and would fall to their targets in an urban area, posing a greater threat of death or disease than would a single warhead containing the germs to be delivered.

3. Should a state be so misguided as to attempt to deliver nuclear weapons by ICBM, they could be guaranteed against intercept in midcourse by the use of appropriate countermeasures. A 1999 NIE judges specifically that Iran or North Korea could have such effective countermeasures by the time of their first ICBM test.

Now a small expansion on each of these points, and then I would welcome questions for discussion.

1. Use of nuclear-armed short-range ship-fired missiles

Iran has available Chinese-made HY-2 and C-802 cruise missiles as well as SCUD-B ballistic missiles with a range of 300 km and 1-ton payload that could be fired from ships. The U.S. now has no defense of coastal cities against the launch from a ship of such a missile carrying nuclear or biological warhead. The 1998 Commission to Assess the Ballistic Missile Threat to the United States stated clearly the threat from ship-launched ballistic or cruise missiles, validated in 2006 by MDA's chief of analysis and scenarios as a way to achieve "great strength at low cost" in analogy to the IEDs that are such a threat in Iraq—but in this case to deliver city-destroying nuclear weapons.[1]

[1] Ben Stubenberg, http://www.defensenews.com/promos/conferences/cmd/1739588.html

2.ICBM with dozens or hundreds of bomblet/RVs

ICBM delivery of a warhead containing 500 kg of anthrax or smallpox must provide a shield against the heat of reentry and then a means of aerosolizing the bio agent so that it will remain suspended as it wafts across the city. It would be militarily more effective and incidentally proof against intercept by the midcourse interceptors to divide the payload into a many few-kg bomblets, each with its own heat shield/RV—the bomblets of the design from the US BW program in the 1960s, now declassified. Effective heat shields for reentry are available from NASA data as described in a 2000 report[2] and illustrated here.

[2] "Countermeasures…" http://www.ucsusa.org/assets/documents/jump.jsp?origID=pdf-348 (Page 54)

2. **ICBM with dozens or hundreds of bomblet/RVs** (more)

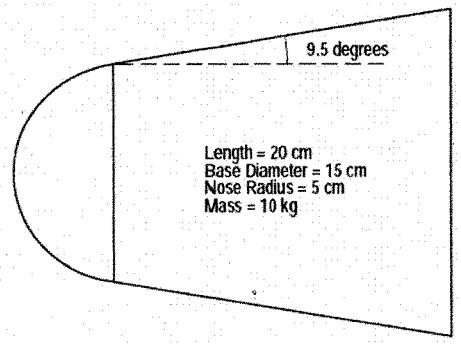

Figure 7-1. The configuration used for calculating the heating of a conical bomblet. *It has a nose radius of 5 cm, a base diameter of 15 cm, a length of 20 cm, a cone half-angle of 9.5 degrees, a mass of 10 kg, and a ballistic coefficient of 12,000 N/m² (250 lb/ft²).*

occupy only a third of this volume, leaving plenty of room for the dispensing mechanism.[18]

Details of Dispensing Bomblets. It is useful to compare the trajectories of the bomblets with the trajectory that a unitary warhead would follow if launched by the

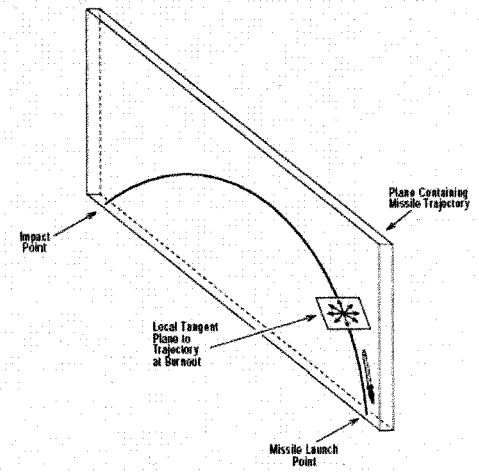

Figure 7-2. The trajectory a bomblet would have if it was given no additional δv after burnout of the missile. *The tangent plane to the trajectory at burnout is also shown. Giving the bomblets small velocity changes δv by adding velocity vectors lying in this plane will spread the impact points of the bomblets around the δv=0 impact point.*

3. Countermeasures to intercept of a nuclear warhead

Others on this panel will discuss decoys and countermeasures in detail, and I am prepared to answer questions. Here I just note that MDA claims now to be able to handle decoys on a few ICBMs launched from Iran or North Korea but its director in a 2007 article[3] writes *"And the Multiple Kill Vehicle system is a generational upgrade to the land- and sea-based midcourse interceptors that will allow us to handle decoys and countermeasures."* But how does the system available in 2015 allow us to "handle decoys and countermeasures" now? A classified technical session devoted to the decoy problem and solutions could bring some assessment of the realistic performance of the system.

[3] "Missile Defense Hits Mark" http://www.defensenews.com/story.php?i=3244574&c=FEA&s=COM

Questions for the Missile Defense Agency

a. In the past, defense against ICBM delivery of bio weapons against U.S. cities was one of the goals promised by national missile defense. Does MDA now believe that the mid-course defense now deployed has the ability to defend against ICBMs equipped with scores of bomblet/RVs that separate just after boost phase? Does MDA believe that threat is not realistic?

b. In view of the 1999 NIE's judgment that Iran or North Korea would have decoys for their ICBMs by the time of the first flight test, can MDA point to a sound,

technical (classified) analysis that analyzes the performance of the present MDA-deployed system against the suite of decoys stated as credible in the NIE—separating RVs, spin-stabilized RVs, RV reorientation, radar absorbing material (RAM), booster fragmentation, low-power jammers, chaff, and simple (balloon) decoys?

c. In a June 28, 2007 presentation to a European Union body, MDA's executive director assumes "Interceptor launched 250-300 sec after threat." In one of my papers[4] I note that interceptor launch 50-100 sec

[4] "Ballistic Missile Deployment to Poland.." http://www.fas.org/rlg/081507BMDPe.pdf

after threat was assumed by a very competent study. MDA's assurance that the interceptors in Poland would not be able to destroy even one Russian ICBM launched against the United States (and that of President Bush and Secretary Gates) depends on this assumption of 250-300 sec delay in launch. MDA should be requested to explain why an interceptor can't be launched less than100 sec after the threat.

Mr. TIERNEY. Thank you very much, Doctor.

And I would like to inject, I understand there is a procedural vote that has been called on the floor. We are going to continue the hearing. So if anyone wants to go vote, you should feel free to do that.

Mr. Kueter.

STATEMENT OF JEFF KUETER

Mr. KUETER. Mr. Chairman, members of the subcommittee and Mr. Franks, I appreciate the opportunity to appear before you today to discuss the growing ballistic missile threat and the options that we are pursuing to defend against them.

The ability to deliver ballistic missiles at long ranges is increasing among nations hostile to the United States. The ballistic missile's ability to act as an instrument of terror drives the desire to acquire missiles at longer and longer ranges. North Korea has many short- and medium-ranged missiles, yet it continues to pursue the Taepodong. Similarly, Iran is investing in longer-range missiles even though it, too, possesses a sizable short- and medium-range arsenal. Like North Korea, with whom they share critical technologies, designs and plans, the Iranians are seeking solid propellent technologies as well as new missile designs.

Writing in 2001, Brookings Institution scholars Michael O'Hanlon and James Lindsay note the consequences: "The prospect of wholesale slaughter is what gives long-range missiles their course of power."

Without a defense, the choices available to deter missile proliferators are unpalatable. In June 2006, as concerns about the North Korean ballistic missile test peaked, Ashton Carter and the former Secretary of Defense William Perry argued in favor of a preemptive strike to prevent the launch of the test missile. Should the same policy apply to Iran? What should the United States do when Iran is ready to test its space launch vehicle that will demonstrate its capability to have ICBM capabilities?

The risks of such a strategy are obvious, and the consequences of the war it would start are grim. Even in the case of North Korea, such a provocative use of U.S. offensive military power risks too much.

In December 2002, President Bush called for the deployment of missile defense assets capable of providing an initial defense against the rogue-state ballistic missile threat. The initial deployment was expected to be, "modest" but limited for available defensive missions beginning in 2004. These efforts were clearly considered, "just a starting point," for the development of improved and expanded capabilities.

Today, the United States has 24 ground-based midcourse interceptors in Alaska and California, with a total of 30 planned for by the end of 2008. Twelve Aegis ships are equipped with long-range surveillance and track capabilities. Conversion of six more are planned by the end of the year. These vessels are also outfitted with the standard Missile–3 interceptors.

The Patriot PAC–3 terminal defense system is in the hands of the U.S. Army. The construction and integration of the Fylingdales radar in the United Kingdom, the Cobra Dane radar, the sea-based

X-band radar, and the forward-based transportable X-band radar, in addition to the development of the communications and battle management systems and software linking all of them together, enlarge the battlespace, provide overlapping fields of vision to increase the accuracy of the tracking data, and ease the handoff of information to the kill vehicle.

The hit-to-kill approach has been successfully demonstrated 34 times by various systems since 2001. Dr. Charles McQueary, the current director of the Operational Test and Evaluation Office at the Department of Defense, told the Senate earlier this month that, "Hit-to-kill is no longer a technical uncertainty. It is a reality, being successfully demonstrated many times over the past few years. There is still a long way to go, but the MDA's disciplined and principled approach to flight and ground test is continuing to pay real dividends."

Last fall's midcourse defense flight test shows just how far we have come. The September test had service men and women crewing the interceptors, the radars and the fire control system and target intercept geometries based on the North Korean launch against the continental United States. Approximating conditions reminiscent of the summer of 2006, when intelligence reports provided rough estimates of the times when North Korea might test its Taepodongs, the warfighter only received notice that the window for the test was opening and to be on alert, forcing them to react immediately when the target was launched. Similar approaches are taken for the flight tests of the other systems.

On the issue of countermeasures, successfully developing and using them requires detailed knowledge of the defensive system, exemplary systems engineering to ensure they function properly with the warhead and flight testing. Detailed technical information about the operational characteristics of the U.S. system is not readily available.

Flight tests should allow for the study of the performance and then modification of our own responses. Should flight tests be foregone to avoid such detection, the prospective attacker introduces significant risk of failure into their missile arsenal. Our system was tested with these known countermeasures in seven ground and flight tests between 1997 and 2000. And since that time, the target acquisition, discrimination and terminal homing abilities of the kill vehicle are tested regularly, with 2008 plans calling for the resumption of active flight testing against countermeasures. Future plans entail the use of ever more advanced sensors and algorithms, as well as a volume kill capability.

On the question of cost, only once in more than 25 years has the missile defense's share of the total defense budget exceeded 2 percent of the annual budget, and that occurred in fiscal year 2002 when it reached exactly 2 percent. In recent years, the total varies from 1.3 to 1.6 percent of the defense budget, I believe an adequate investment and insurance against an unthinkable outcome.

Like any development program, changing priorities and requirements add delays. With goals changing over the long period of time from the early 1980's, when the focus was on space and global defense, to theater defense in the early days of the Clinton administration, and now to midcourse rogue threats, these require dis-

tinctly different approaches and different weapons systems were pursued, creating a start-and-stop acquisition process that inflated costs.

In conclusion, the decision to deploy missile defense assets as they mature is driven by the desire to provide the building blocks of a defense against emerging threats. The simple fact is that not all threats are known or will be known, and in the current security climate many are not deterrable. Even in the current form, the elements of a U.S. missile defense system offer options heretofore unavailable. With further research, development and testing, the accuracies and capabilities of these systems will only improve. Further improvement is essential, but the progress is positive.

NATO's recognition of the threat posed to Europe from ballistic missiles is an important recent indicator of the seriousness of the situation. That NATO and 17 other nations are working with the United States on missiles is further evidence that ballistic missiles are recognized as a global security challenge and that the approaches outlined by the United States are valid.

Thank you for the opportunity to appear today.

[The prepared statement of Mr. Kueter follows:]

TESTIMONY OF JEFF KUETER
PRESIDENT, GEORGE C. MARSHALL INSTITUTE
WASHINGTON, D.C.

BEFORE THE SUBCOMMITTEE ON NATIONAL SECURITY AND FOREIGN AFFAIRS
COMMITTEE ON OVERSIGHT AND GOVERNMENT REFORM
U.S. HOUSE OF REPRESENTATIVES

APRIL 16, 2008

Mr. Chairman, Mr. Shays, and Members of the Subcommittee, I appreciate the opportunity to appear before you today to discuss the importance of ballistic missile defense to the security of the United States. I am Jeff Kueter, President of the George C. Marshall Institute. The George Marshall Institute is a 501(c)(3) non-profit organization founded in 1984, focused on how science is used in making public policy. The Institute's analyses are designed to improve the comprehension of the public, the media, and policy makers of important scientific and technical issues. We publish reports and host roundtables and workshops. Our activities focus on the environment and national security topics, with a particular emphasis on ballistic missile defense and space security.[1]

The Importance of Missile Defense

Missile defense provides the United States with options for addressing a growing threat in an uncertain world. During the Cold War, the ballistic missile was an instrument of strategic power, employed by both the U.S. and the Soviet Union as a means to check each other's global power. Through the recognition that use of these capabilities would result in wholesale destruction, a certain macabre stability emerged. Today's security environment is much different and so are the roles that growing ballistic missile arsenals play.

Today, states view the ballistic missile as a relatively cheap way to gain considerable leverage. Through its ability to reliably deliver significant firepower at precise locations, the ballistic missile is assuming strategic roles previously held by fighter and bomber aircraft. The ability to deliver ballistic missiles at long ranges is increasing among nations hostile to the United States. Perhaps because of the ballistic missile's ability to act as an instrument of terror, the pursuit of missiles with ranges in the

[1] More information on the Marshall Institute's work on ballistic missile defense is available http://www.marshall.org/subcategory.php?id=12.

thousands of kilometers strongly suggests that motives outside of regional concerns are driving the decisions to invest in missiles of longer and longer ranges.

The National Air & Space Intelligence Center concludes its 2006 assessment stating: "Ballistic missiles are already in widespread use and will continue to increase in number and variety. The availability of weapons of mass destruction for use on ballistic missiles vastly increases the significance of this threat."[2]

North Korea already has an arsenal of more than 100 short- and medium-range missiles capable of striking points throughout American allies, South Korea and Japan. Yet, it continues to pursue the longer range Taepodong which is intended to have striking capabilities in the thousands of kilometers. Further, North Korea is working to develop solid fueled intermediate- and short-range missiles, which would provide them with a more accurate and mobile force.

Similarly, Iran is investing in longer range missiles even though it already possess a sizeable short- and medium-range arsenal. The extended-range version of the Shahab-3 would give Iran the ability to strike targets in southern and eastern Europe. Like the North Koreans (with whom they share critical technologies, designs, and plans), the Iranians are seeking solid-propellant technology as well as new missile designs.

The emergence of long-range missiles in the arsenals of countries hostile to the United States, our friends, and allies, and the widespread availability of the knowledge and technical capacity to build such arsenals, are cause for concern. Writing in 2001, Michael O'Hanlon and James Lindsay of the Brookings Institution note the consequences:

> "The death toll in a biological or nuclear attack from a single missile could easily exceed the total number of U.S. soldiers who died fighting in the Korean War and would probably be comparable to the casualties in Hiroshima and Nagasaki ... a missile armed with a nuclear warhead that landed on downtown [Los Angeles] at mid-day could kill 250,000 people instantly and tens of thousands more in the days and weeks to follow. The prospect of wholesale slaughter is what gives long-range missiles their coercive power."[3]

A missile defense reduces the coercive power, discourages the acquisition of missiles, deters aggressors from action by reducing the probability of success, and, most importantly, offers the possibility of saving the lives of thousands of people in the event a missile is launched.

Without a defense, the choices available to deter missile proliferators are unpalatable. For instance, Ashton Carter and former Secretary of Defense William Perry, writing in June 2006 as concerns about a North Korean ballistic missile test were at their peak, advocated a pre-emptive strike to prevent the launch of the test missile. They said: "But intervening before mortal threats to U.S. security can develop is surely a prudent policy. Therefore, if North Korea persists in its launch preparations, the United States

---

[2] National Air & Space Intelligence Center. *Ballistic and Cruise Missile Threat*, (March 2006).
[3] Michael O'Hanlon and James Lindsay. *Defending America* (Brookings Institution: Washington, D.C., 2001):. 80-81.

should immediately make clear its intention to strike and destroy the North Korean Taepodong missile before it can be launched."[4]

Should the same policy be applied to Iran? What should the United States do when Iran is ready to test its space launch rocket as it has expressed the intention to do? The risks of such a strategy are obvious and the consequences of the war it would start are grim. Even in the case of North Korea, such a provocative use of U.S. offensive military power risks the start of offensive operations against South Korea or Japan as well as widespread international condemnation.

As the aforementioned has illustrated, the end of the Cold War strategic competition has seen important changes in the nature of the ballistic missile threat. The drawdown in the U.S. and former Soviet strategic arsenals may have produced a decline in the aggregate number of ballistic missiles, but the number of states seeking these capabilities is rising, as is the sharing of technical expertise and capabilities. Strengthened enforcement of missile technology control regimes is essential, but not sufficient to deter the existing threat, much less that expected to emerge.

Earlier this month, the Bucharest Summit Communiqué issued by NATO acknowledged the significance of the ballistic missile threat and agreement with the path forward outlined by the United States. They said:

> "Ballistic missile proliferation poses an increasing threat to Allies' forces, territory and populations. Missile defence forms part of a broader response to counter this threat. We therefore recognise the substantial contribution to the protection of Allies from long-range ballistic missiles to be provided by the planned deployment of European-based United States missile defence assets. We are exploring ways to link this capability with current NATO missile defence efforts as a way to ensure that it would be an integral part of any future NATO-wide missile defence architecture."[5]

Effectiveness of U.S. Missile Defense Systems

In December 2002, President Bush called for the deployment of missile defense assets capable of providing an initial defense against the rogue state ballistic missile threat. The initial deployment as outlined by the President was expected to be "modest" but available for limited defensive missions beginning in 2004.[6] These efforts were clearly considered just "a starting point" for development and deployment of improved and expanded capabilities in the years that followed.[7]

Today, the United States has twenty-four ground-based midcourse interceptors in missile fields at Fort Greely, Alaska, and Vandenberg Air Force Base, California, with a

---

[4] Ashton Carter and William Perry. "If Necessary, Strike and Destroy: North Korea Cannot Be Allowed to Test This Missile" *Washington Post* (June 22, 2006). (http://www.washingtonpost.com/wp-dyn/content/article/2006/06/21/AR2006062101518.html)

[5] Bucharest Summit Declaration Issued by the Heads of State and Government participating in the meeting of the North Atlantic Council in Bucharest on 3 April 2008 (http://www.nato.int/docu/pr/2008/p08-049e.html).

[6] Department of Defense, Missile Defense Deployment Announcement Briefing (December 17, 2002) – http://www.defenselink.mil/news/Dec2002/t12172002_t1217missiledef.html

[7] George W. Bush (December 17, 2002) – http://www.whitehouse.gov/news/releases/2002/12/20021217.html

total of thirty planned for by the end of 2008. Twelve Aegis ships are equipped with the long-range surveillance and track capabilities needed to perform ballistic missile defense missions. Conversion of six more is planned by the end of 2008. These vessels are outfitted with Standard Missile Three (SM-3) interceptors. Further expansion of the Navy's capabilities will come with the upgrading of the SM-2 Block IV missile, the goal being to deploy up to 100 interceptors to provide a near-term terminal engagement capability on eighteen Aegis BMD ships beginning in 2009. The Patriot PAC-3 terminal defensive system was completed and transitioned to the U.S. Army. Work on the Fylingdales Radar in the United Kingdom, the Cobra Dane Radar, the Sea-Based X-Band Radar, and the forward-based transportable X-Band radar in addition to the development and construction of the communications and battle management systems and software linking the whole system together was completed. The integration of these multiple radars enlarge the battlespace, provide overlapping fields of vision to increase the accuracy of tracking data and prevent the creation of blindspots, and ease the transition or "hand-off" of information to the kill vehicle.

The hit-to-kill approach was successfully demonstrated thirty-four times in various systems since 2001. The purpose of tests is to evaluate progress and reveal areas in need of improvement. The "unsuccessful" intercept tests of the ground-based midcourse defense revealed problems with the booster rockets. Those problems were corrected, as illustrated by the successful functioning of the system in its September 2007 flight test. The Aegis program has had thirteen successful intercept tests, with its two "failures" linked to assembly issues with the divert attitude control (FM-5, June 2003) and an incorrect system setting, a human error (FTM-11, December 2006). The Terminal High Altitude Area Defense (THAAD) is four for four in its intercept tests, with one target malfunction resulting in a canceled test. The failures therefore revealed hardware and engineering issues associated with the boosters and highlighted the importance of investing in a reliable target set. For each of the systems, the test experiences show that, once deployed, the kill vehicle reliably finds and destroys its target.

The realism of the testing program, particularly for the GMD system, is sometimes questioned. The Patriot PAC-3 system was operationally deployed and used during Operation Iraqi Freedom, where it destroyed nine Iraqi missiles in nine attempts. The Aegis BMD, which has successfully destroyed separating and unitary targets and has had a simultaneous interception of two targets, led Dr. Charles McQueary, Director of Operational Test and Evaluation at the Department of Defense, to state before the Senate Armed Services Committee on April 1st that Aegis BMD has "demonstrated the capability to detect, track, and engage short- and medium-range ballistic missile targets in the midcourse phase with Standard Missile-3 missiles."[8]

The GMD program suffers from the perception that its testing program is lacking in "operational realism." It is important to remember that progress in the test program was delayed by failed launches of the booster rocket in 2004-05 and a target failure in 2007. Nevertheless, the September 2007 flight test involved many operational elements, including servicemen and women crewing the interceptors, the radars, and the fire control system and target intercept geometries based on a North Korean launch against the

---

[8] Dr. Charles McQueary, Statement before the Senate Armed Services Committee, Strategic Forces Subcommittee, April 1, 2008. http://armed-services.senate.gov/statemnt/2008/April/McQueary%2004-01-08.pdf

continental United States. Approximating conditions reminiscent of the summer of 2006, when intelligence reports provided rough estimates of the times when North Korea might test launch its Taepodongs, the September test provided the warfighter with notice that a window for the test was opening and to be on alert, forcing them to react immediately when the target was launched. Similar approaches are taken for the flight tests of the other systems.

General Obering, the Director of the Missile Defense Agency, further described the "operational" aspects of the test for the Senate in early April:

> "To demonstrate the long-range BMDS capability, for example, we conducted an integrated flight test last September involving a realistic target launched from Alaska and tracked by the operational upgraded early warning radar in northern California. An Aegis ship and the sea-based X-band radar in the North Pacific tracked the target as well. The target was successfully destroyed by a Ground-Based Interceptor (GBI) launched from an operationally configured silo in central California. The data needed to calculate a fire control solution for the interceptor was provided by the operational system and the operational command and control, battle management and communications system was employed by the warfighting commanders. Overall, this single test included numerous components separated by thousands of miles and managed by four executing organizations within the Missile Defense Agency."[9]

The absence of sufficient flight test data is cited by the Government Accountability Office as well as Dr. McQueary as an impediment to their assessment of the Missile Defense Agency's modeling and simulation efforts. The MDA is presently working to anchor the models with the flight test data to validate the models, which should address these concerns. Dr. McQueary's office is working directly MDA personnel in the test planning and execution process.

All agree the challenge is continued demonstration of the GMD and other systems against more complex scenarios and in more stressing conditions. We are all anxious to see further demonstrations of the system's abilities, but the pace of the testing schedule is influenced by the costs of the tests ($80-100 million per test for the GMD) and, more importantly, the time it takes to analyze, interpret, and incorporate the results of the terabytes worth of data generated from each past test into a new test processes.

Dr. McQueary's concluding comments offer important perspective on how far the program overall has come, however. He stated:

> "Hit-to-kill is no longer a technological uncertainty; it is a reality, being successfully demonstrated many times over the past few years. The challenge now is to demonstrate hit-to-kill in more complex target scenes that include not only target deployment artifacts but countermeasures as well. General Obering has this in his future test plans. Individual element successes indicate their growing capabilities. Integrated ground testing of the BMDS continues to demonstrate that

---

[9] Lt. General Henry "Trey" Obering, Statement before the Senate Armed Services Committee, Strategic Forces Subcommittee, April 1, 2008. http://armed-services.senate.gov/statemnt/2008/April/Obering%2004-01-08.pdf

the warfighters understand and can operate the system confidently and effectively. There is still a long way to go, but the MDA's disciplined and principled approach to flight and ground tests is continuing to pay real dividends."

It is asserted that the midcourse defense challenge is insurmountable because adversaries can defeat the defense through the use of countermeasures. Successfully developing and using countermeasures requires detailed knowledge of the defensive system they are designed to overcome, exemplary systems engineering so the offensive system and the countermeasure function properly, and flight testing to ensure proper operation. Knowledge of the operational characteristics of the U.S. system are not widely available. Flight tests of countermeasures would allow study of their performance and modification of our own responses accordingly. Should flight tests be foregone so as to avoid such detection, the prospective attacker has introduced significant risk into their missile arsenal. The U.S. GMD system was tested against known countermeasures in seven ground and flight tests between 1997-2002. Since that time, the target acquisition, discrimination, and terminal homing abilities of the kill vehicle are tested on a regular basis with 2008 flight test plans calling for the resumption of active flight testing against countermeasures. Future plans entail the use of ever more advanced sensors and algorithms as well as a volume kill capability.

In summary, the ballistic missile defense today represents significant progress since 2002. The construction and fielding of the initial defensive capability called for by the President is well underway. Future efforts will build on this foundation by engaging missiles in their boost phase of flight, enabling multiple intercept opportunities from the same interceptor, and improving the sensor, tracking, and battle management abilities of the entire system.

Evaluating the Investment in Missile Defense

An examination of expenditures on missile defense efforts since the 1980s reveals short bursts of growth or reductions followed by periods of stability. As Figure 1 illustrates, missile defense has seen rising shares of total defense research and development (R&D) since the inception of a dedicated effort in the early 1980s. After averaging between 8-10% of the defense R&D budget for most of the FY 1987-2001 period, the share of defense R&D funds allocated to missile defense has fluctuated around 11% since FY 2001. In FY 2008, missile defense accounted for 11% of the defense R&D budget. The FY 2009 budget request maintains that allocation.

Figure 1

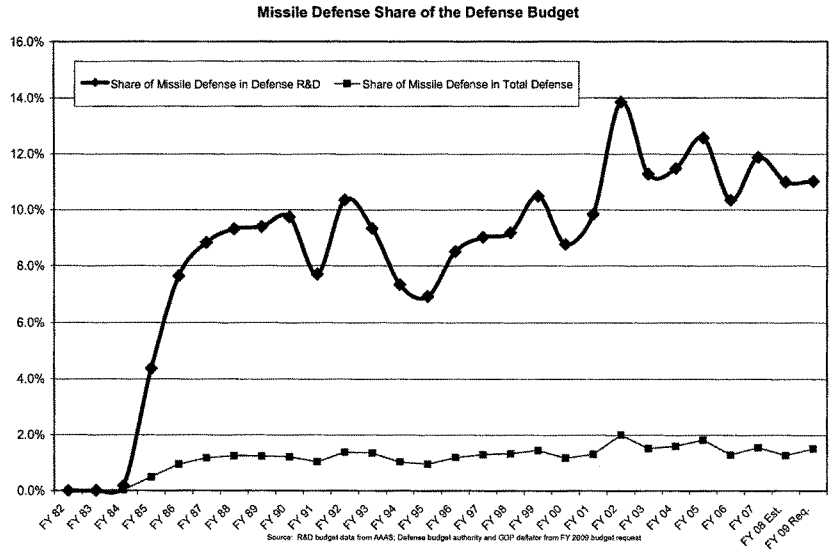

While the R&D share has grown, missile defense remains a small element of the overall defense portfolio. Only once in more than 25 years has missile defense's share of total defense budget authority exceeded 2% of the annual budget. That occurred in FY 2002 when it reached exactly 2%. In FY 2008, missile defense activities represented 1.3% of the total defense budget, down from 1.6% in FY 2007. The FY 2009 request would allocate 1.5% of defense budget authority for missile defense R&D.

The growing of share of missile defense in the R&D portfolio is indicative of increased effort and priority, but it is also a function of changes to other elements of the defense R&D portfolio. The Air Force and Navy show generally rising R&D budgets in the most recent fiscal years whereas the Army, the Defense Advanced Research Projects Agency (DARPA) and others all present flat or declining budgets, in inflation-adjusted terms.

Looking over the FY 1982-2009 period, support for missile defense activities show three distinct phases. In the 1980s, support for missile defense increased rapidly between FY 1984-1987 and then leveled off at approximately $4.5 billion annually before beginning to decline noticeably after FY 1992. Through the 1990s (FY 1990-99), the missile defense R&D budget averaged $3.6 billion with large annual fluctuations, ranging between a low of $2.6 billion in FY 1995 and a high of $4.5 billion in FY 1992. A sharp increase occurred in FY 2002, when the budget jumped from $4.1 to $6.6 billion. From FY 2002-2008, the missile defense R&D budget averaged $7 billion and shows a pattern of slow growth since FY 2002, rising $394 million in inflation-adjusted dollars between FY 2002-2008.

Figure 2

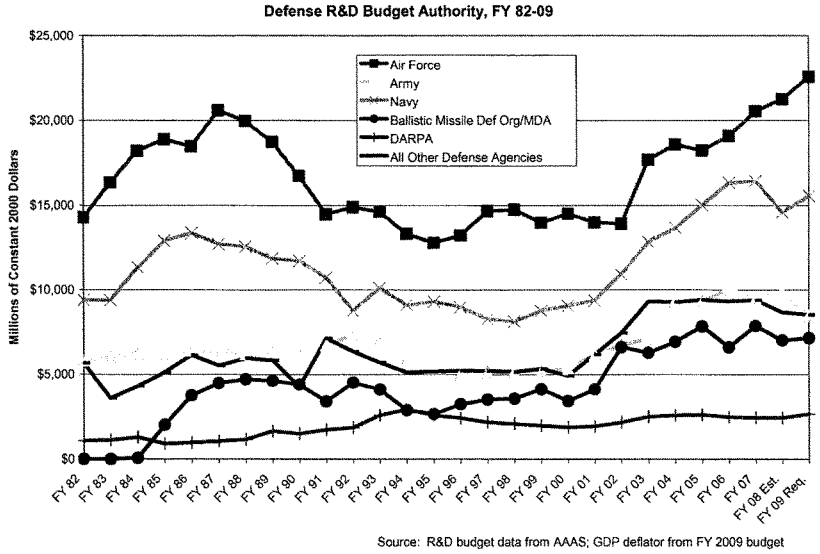

Examining the top-line financial picture reveals how the prioritization of the missile defense mission has changed over time. Much like the top-line Air Force R&D budget, which covers activities as disparate as airframe development, engines, satellites, and rockets and shows changing emphases over time, the total missile defense budget encompasses sensor platforms, communications, software development, kill-vehicles, boosters and lasers.

Over time, the mix of these priorities has changed substantially. Like any development program, changing priorities and requirements add delays. In the case of missile defense, these changes are substantial. The missile defense envisioned by Presidents Reagan and George H.W. Bush is not the defense we are building today. They saw global defense utilizing small hit-to-kill interceptors deployed in space to intercept missiles in the boost phase of flight, supplemented by ground- and sea-based assets to provide interception options in the midcourse and terminal phases of flight.

The Clinton Administration substantially altered the focus of the nation's missile defense effort. Eliminating the space-based efforts, the Clinton program initially emphasized theater defenses. But, by 1997, the Clinton Administration had committed to developing a longer-range limited midcourse defense, along with the theater defenses. That decision laid the groundwork for the base of capabilities being deployed today. Issues arising from the Anti-Ballistic Missile (ABM) Treaty's limitations on the construction of missile defense assets prompted President Clinton in September 2000 to defer decisions about deployment, leaving them for President George W. Bush.

The Bush Administration chose first to withdraw from the ABM Treaty and then commit to the deployment of missile defense assets as they developed. The significance of the June 2002 withdrawal from the ABM Treaty can not be overlooked when evaluating the recent performance of the missile defense system. The Treaty placed limits on the development and testing of missile defense assets. For example, the Treaty limited the speed and range of target missiles and prevented the use of sea-based radars to support interceptor tests. The Treaty limited construction and deployment activities, including the construction of battle management radars in the Aleutians, deployment of land-based interceptors outside of Grand Forks, ND, and sea-based radars. Finally, the Treaty prohibited the transfer of missile defense components to our allies. As outlined above, our program has taken advantage of being freed from each of these limitations.

In summary, much like the ebb-and-flow of the top-line of the budget, the areas of emphasis within that budget have changed over time. Between 1984-1993, the principal emphasis was the development of space-based systems to provide global defensive capabilities. From 1993-1996, the defense of deployed U.S. forces and allies rose in prominence, leading to the rise in emphasis on terminal phase interceptors. From 1997 to the present, the focus shifted to providing a defense against the emerging long-range ballistic missile threat from North Korea and other so-called "rogue" states. This focus placed prominence on defenses in the midcourse phase of flight as well as continued development of terminal phase defensive systems.

The evaluation of the nation's investments in missile defense must recognize that the change in emphases over time (from global to theater to national) raise very different technical challenges and require weapon systems designed to confront those unique conditions. Much as the Air Force deploys different airplanes for different missions, the missile defense mission is met through distinct systems tailored for specific purposes.

Finally, the timelines for developing technically complex weapons systems has increased dramatically. Longer and longer development timelines are the norm, with the many weapon systems averaging more than a decade between system definition and the fielding of initial operational capabilities. For example, between 1950-1970, fighter aircraft and bombers required 4-5 years to complete the development cycle. From the 1980s forward it now takes fourteen years or more to complete the cycle. The reasons for this state of affairs are many. The decline in the technical competence of the government's acquisition system, changing requirements through the design process, uncertainty about acquisition plans, the expense of the planned systems, and the sheer technical complexity are all cited to explain the delays endemic to virtually all major defense systems.

Summary Remarks

The decision to deploy missile defense assets as they mature is driven by the desire to provide the building blocks of a defense against emerging threats. The simple fact is that not all threats are known or will be known and, in the current security climate, many are not deterrable. Even in their current form, the elements of the U.S. missile defense system offer options heretofore unavailable. With further research, development, and testing, the accuracies and capabilities of these systems will only improve. Further improvement of the defense is essential, but the progress is positive.

NATO's recognition of the threat posed to Europe from ballistic missiles is an important recent indicator of the seriousness of the situation. That Japan, the United Kingdom, Australia, Israel, Germany, the Netherlands, Denmark, Italy, France, India and many others are working with the U.S. on missile defense is further evidence that ballistic missiles are recognized as a global security challenge and that the approaches outlined by the United States are valid.

Thank you for the opportunity to appear here today and to present these views for your consideration.

Mr. TIERNEY. Thank you for your testimony.

Mr. Coyle, we are pleased to hear from you.

STATEMENT OF PHILIP COYLE

Mr. COYLE. Thank you, Mr. Chairman. Chairman Tierney, distinguished members of the committee, I very much appreciate the opportunity to appear before you today to support your examination of the DOD missile defense programs.

The Pentagon is developing a variety of missile defenses, but the ground-based midcourse system, the GMD system, is the largest, most costly and complex of the systems. And my remarks focus on that system today. It was, once upon a time, called National Missile Defense.

In my full prepared testimony, I raise a number of issues that I think the Congress should examine. Quickly, those are: No. 1, the technical and operational performance of the GMD system and the lack of operational criteria by which the Congress can judge success; No. 2, inconsistent and inaccurate information from the Pentagon with respect to both system performance and the threat; No. 3, the lack of demonstrated performance of the GMD system against realistic threats involving decoys and countermeasures, as well as in common operational environments; No. 4, the cost, dollar cost; No. 5, the vulnerability of the GMD system to a direct attack; No. 6, the successes of U.S. diplomacy, which has been our most effective missile defense; and, seven, the ways in which missile defenses can undermine America's arms control and nonproliferation objectives.

Mr. Chairman, as you referred to it earlier, former Senator Sam Nunn has said it best: "National missile defense has become a theology in the United States, not a technology." As a result, U.S. missile defenses are being deployed without well-established operational criteria. How good is the system supposed to be? Is 10 percent effectiveness good enough, or 1 percent? Can the system handle real threats assessed by the Intelligence Community? How many interceptors should be required to defeat one target? Without answers to such questions, it is very difficult for you, the Congress, to evaluate missile defense programs.

The MDA says it can only defend against, "an unsophisticated threat," that is, just one or, at most, two missiles from Iran or North Korea, with no decoys or countermeasures. Should you believe that Iran or North Korea would be reckless enough to attack Europe or the United States with a single missile, with no decoys or countermeasures, and then sit back and wait for the consequences? As we know, ballistic missiles have return addresses. If Iran or North Korea were reckless enough to attack Europe or the United States, they wouldn't launch just one missile. And if they launched several missiles with decoys and countermeasures, U.S. missile defenses couldn't deal with it.

Decoys and countermeasures are the Achilles heel of missile defense. Shooting down an enemy missile going 17,000 miles an hour out in space is like trying to hit a hole-in-one in golf when the hole is going 17,000 miles an hour. And if an enemy uses decoys and countermeasures, it is like trying to shoot a hole-in-one when the hole is going 17,000 miles an hour and the green is dotted with

black circles the size of the hole and the defender doesn't know which to aim for.

The assessments by the Intelligence Community that North Korea and Iran would soon know how to field such decoys and countermeasures, if they didn't already, has already been referred to, made back in 1999.

From a target discrimination point of view, a recent GMD flight intercept tests have actually been simpler and less realistic than the tests more than 5 years ago. None of the GMD flight intercept tests have included decoys or countermeasures for the past 5 years. The GMD system has no demonstrated effectiveness to defend the United States or Europe under realistic operational conditions.

In its fiscal year 2008 budget request, the Pentagon acknowledged this, saying, "This initial capability is not sufficient to protect the United States from the exigent and anticipated rogue-nation threat." The MDA budget also reveals that the MDA wants the proposed missile defenses in Europe to protect existing radar sites in Greenland and the United Kingdom, not, first and foremost, to defend Europe.

In the past 5 years, only two GMD flight intercept tests have been successful. Yet, the MDA must conduct another—about 20 different flight intercept tests before it might be prepared for realistic operational testing. At that rate, it could take the Missile Defense Agency 50 years to be ready for realistic operational testing. Developmental tests are still needed to show that the system can work at night, in bad weather, when the sun is shining in the wrong direction, when the enemy re-entry vehicle uses stealth, when more than one missile is launched by an enemy, and so forth.

The fiscal year 2009 President's budget asks for over $12 billion for DOD spending on missile defense. And, over the next 5 years, that budget request calls for $62.5 billion to be spent on missiles. If the Congress supports this, by the end of 2013, 5 years from now, over $110 billion will have been spent since 2003, not counting prior spending in the previous decades.

Since there are no operational criteria established for the system, the Pentagon doesn't know what the eventual costs might be. The costs are open-ended, and there is no end in sight.

Too often the White House, the Pentagon or the MDA makes statements that could mislead the Congress and the media. My prepared statement gives a few examples.

Major elements of the U.S. missile defense system are vulnerable to direct attack. For example, the floating sea-based X-band radar is literally a sitting duck. So, also, are the early warning radars in Greenland and in England, as would be the radar proposed to be sited in the Czech Republic.

The Pentagon does not explain it, but we need to remember that if we ever need to rely on missile defenses against ICBMs, it would be in an all-out nuclear war, mushroom clouds and all. The Congress could examine whether missile defenses could be depended upon under those circumstances.

Diplomacy has been our most effective missile defense. In my full statement, I describe how in 1999 Dr. William Perry and now more recently Ambassador Christopher Hill have shown that effective diplomacy is hard to beat. The U.S. proposal to site missile defenses

in Poland and the Czech Republic has alienated Russia and upset the overall strategic balance to a degree not seen since the height of the cold war, but for no good purpose. The proposed U.S. system has no demonstrated operational effectiveness to defend Europe nor the United States.

Americans have a tendency to over-rely on technology as the first best hope to solve our problems. With missile defense, the United States has been trying for 60 years without success. Other approaches are needed.

Mr. Chairman, thank you for your attention.

[The prepared statement of Mr. Coyle follows:]

Prepared Remarks before the:

House Committee on Oversight and Government Reform,
Subcommittee on National Security and Foreign Affairs

"What are the Prospects, What are the Costs?:
Oversight of Ballistic Missile Defense (Part 2)"
Wednesday, April 16, 2008
2:00 p.m.
2154 Rayburn House Office Building

Philip E. Coyle, III
Senior Advisor
World Security Institute

Chairman Tierney, Representative Shays, distinguished Members of the Committee, I very much appreciate the opportunity to appear before you today to support your examination of the Department of Defense programs in missile defense.

I am a Senior Advisor to the non-profit Center for Defense Information, a division of the World Security Institute, a Washington, D.C.-based national security study center. To help insure our independence, the World Security Institute and the Center for Defense information do not accept any funding from the Federal government, nor from any defense contractors.

In 2005 and 2006, I served on the nine-member Defense Base Realignment

and Closure Commission, appointed by President George W. Bush and nominated by House Democratic Leader, Nancy Pelosi.

Beginning in late 2004, I served on Governor Arnold Schwarzenegger's Base Support and Retention Council, from which I resigned to serve on the President's Commission.

From 1994 to 2001 I served in the Pentagon as Assistant Secretary of Defense and Director, Operational Test and Evaluation. In this capacity, I was principal advisor to the Secretary of Defense and the Undersecretary of Defense for Acquisition, Technology and Logistics on test and evaluation in the DOD. I had OSD OT&E responsibility for over 200 major defense acquisition systems including the present-day missile defense programs.

From 1959 to 1979, and again from 1981 to 1993, I worked at the Lawrence Livermore National Laboratory. Over those 33 years I worked on a variety of high technology programs, and retired from the Laboratory in 1993 as Laboratory Associate Director and deputy to the Director.

In my current capacity at the Center for Defense Information I am called upon to provide independent analysis on various defense matters. I have over 40 years of experience involving U.S. and worldwide military research, development and testing, on operational military matters, and on national security policy and defense spending.

Introduction

Mr. Chairman, there is a troublesome lack of clarity in public discourse regarding both the rationale for and the technical progress toward, a U.S. missile defense network. The reason for this confusion is clear when one examines the historical record. Quite simply, the public statements made by Pentagon officials and contractors are often at variance with all the facts at hand. In the ongoing administration advocacy to ensure continuing support for a missile defense program that is expected to cost hundreds of billions of dollars, it has become difficult to separate programmatic spin from genuine developmental progress, and claimed value from liabilities. In particular, there has been a lack of substantive discussion about the ways in which missile defenses can undermine America's arms control and non-proliferation objectives.

The Pentagon is developing a variety of missile defense systems, - land, sea, air, and space-based – but the Ground-based Midcourse Defense system (GMD) – formerly called National Missile Defense (NMD) – attracts the most attention from lawmakers and the media. It is the largest and most complex of the systems, and will be the most costly. It is also the centerpiece in the current Defense Department plan for defending the United States from long-range intercontinental ballistic missiles (ICBMs) fired by a hostile enemy, and for those reasons I will concentrate on that system today.

The Lack of Operational Criteria

In reviewing the status of U.S. missile defense programs, I want to stress at the outset the current programs have no operational criteria for success.

How good is the system supposed to be? Is 10% effectiveness good enough? What about 1%? Can the system handle realistic threats as documented in Intelligence Community threat assessments? How many interceptors should be required to defeat one target?

Without answers to such questions, it is very difficult for the U.S. Congress to evaluate these programs. And, as has often been noted by the GAO , it also makes it difficult for the GAO or for my former office in the Pentagon to evaluate these programs for the Congress.

This also explains why the warfighter, e.g. STRATCOM, has been reluctant to say that the United States has an operational capability or whether it would be effective.

Eight years ago President Clinton established four criteria against which he would make a deployment decision. The Clinton criteria, announced by the White House in December 1999, a year before he would make a decision, were:

1. "Whether the threat is materializing;

2. the status of the technology based on an initial series of rigorous flight tests, and the proposed system's operational effectiveness;

3. whether the system is affordable; and

4. The implications that going forward with National Missile Defense (NMD) deployment would hold for the overall strategic environment

and our arms control objectives."

At that time the goal was to be able to shoot down a single missile due to an accidental or unauthorized launch from Russia or China, not to be able to defend against a deliberate missile attack. But at that time there had only been only three NMD flight intercept tests, and because the last two of those three tests failed, the missile defense system clearly was shown not to be effective.

As a result, President Clinton did not have to spend much time considering the cost or the international relations aspects of his decision to not deploy the system. The system simply had not been shown to be effective, and that was that.

During the Reagan years, Paul Nitze, the highly regarded scholar and statesman, presented three criteria that any - in those days it was the Strategic Defense Initiative (SDI) - missile defense system must meet before being considered for deployment. The Nitze criteria were shorter and included two important military considerations: that the system be able to survive direct attack, and that the system be cost effective on the margin. Nitze's criteria were formally adopted as National Security Directive No. 172 on May 30, 1985. The Nitze criteria were:

1. The system should be effective;

2. Be able to survive against direct attack; and

3. Be cost effective at the margin - that is, be less costly to increase your

defense than it is for your opponent to increase their offense against it.

The Ground-based Missile Defense system being deployed in Alaska and California, and the proposed U.S. missile defense system for Europe, meet none of the above criteria, not the Clinton criteria and not the Nitze criteria. And new or different criteria for the system have not been established by the current administration.

Instead the Missile Defense Agency (MDA) is pursuing a path of "spiral development," sometimes called, "Capability Based Acquisition," concepts which have been taken to an unworkable extreme by the MDA. The extreme example is the overall Ballistic Missile Defense System about which the Missile Defense Agency insists, "There are currently no final or fixed architectures and set of requirements for the proposed BMDS."

Under this approach, spiral development or other "dynamic acquisition" concepts become like building a house while the floor plan is constantly changing. It makes for a very expensive house, and if your family ever gets to move in, they find they don't like how their topsy-turvy house turned out.

With dynamic acquisition processes, especially capability-based acquisition, there may be no established baseline for even the first increments. In missile defense, and a few other complex DOD programs, the problems with dynamic acquisition stem from a lack of definite requirements.

The Defense Science Board has advised the DOD that "Each spiral should be an enforced baseline," and adds, "There needs to be a careful assessment

of technological readiness, with risk reduction activity outside and preceding major program activity where significant technical risks exist." [1]

In missile defense, this advice is too often not heeded.

Without an enforced baseline of requirements or other established criteria, the Congress cannot rely on the Pentagon's cost estimates, or know whether an effective system will result. Without established criteria the Congress is buying another Winchester Mystery House, that famous 160-room Victorian mansion in San Jose, California, that was under continuous construction for 38 years without any master building plan. The maze-like house has staircases that lead to nowhere, second floor outside doors that open to nothing except a 10 foot drop, and oddly arranged rooms where you would least expect them.

For this reason, the criteria described above, both the Clinton criteria and the Nitze criteria, are still helpful today in helping us to gauge where we stand with missile defense, what we have gotten for the effort, and where we should be going.

In making his decision in December, 2004, to deploy the GMD system in Alaska and at Vandenberg AFB in California, President Bush appears to have had no criteria other than an ideological commitment.

Former Senator Sam Nunn has said it best: "National missile defense has become a theology in the United States, not a technology."

But when it comes to missile defense, theology is not enough.

Missile defense is the most difficult development the Pentagon has ever attempted, beyond any Army tank, Navy ship, high performance jet fighter or helicopter. And those developments often take 20 years or more. Missile defense has been under development in the United States for 60 years. As noted by the Chairman in your first hearing, a conservative estimate is that the U.S. has spent more than $120 billion on missile defense. From looking at figures from the Congressional Budget Office, I would estimate that since President Reagan's famous 'Star Wars" speech in 1983, about $150 billion has been spent. [2] And over the next five years, the Pentagon has requested another $62.5 billion for missile defense, with no end in sight.

If the Congress supports this spending on missile defense, by the end of 2013 over $110 billion will have been spent just since 2003, not counting the missile defense spending in the previous 20, 40, or 60 years.

The question before you today is what, if anything has really changed in the last eight years? Is the threat worse or less? Is the technology more tractable? Is the cost manageable and affordable in relation to other U.S. priorities? And is the danger to America growing because of the response of other countries to U.S. missile defenses?

The Threat, or Not

In your March 5, 2008, hearing, Joseph Cirincione testified that since 2001, the threat – especially the threat from intercontinental ballistic missiles that

can reach the United States – has gone down, not up. Yet the Missile Defense Agency claims that the threat from ballistic missiles is growing.

To motivate the need for missile defenses, the MDA has pointed to missiles in twenty countries. However, all but two of these twenty countries—Iran and North Korea—are either friends, allies, or countries from which we have no missile threat—for example, Israel, India, Pakistan, Vietnam, South Korea, Moldova, Ukraine, Saudi Arabia, and Egypt. Venezuela was recently added to the list. [3] Further, with the exception of Russia and China, none of these twenty countries—including Iran and North Korea—has ballistic missiles that can reach the United States. In October 2007, the White House announced: "America faces a growing ballistic missile threat. In 1972 just nine countries had ballistic missiles. Today, that number has grown to 27 and it includes hostile regimes with ties to terrorists." [4]

Vice President Cheney reiterated that estimate in a speech on March 11, 2008. The White House has not explained how it came up with twenty-seven countries, rather than MDA's already misleading claim of twenty.

Operationally, such estimates are pointless since the MDA says that it can only handle "an unsophisticated threat," that is, just one or at most two missiles from Iran (or North Korea), with no decoys or countermeasures. This is not because that would be a realistic threat, but because it is the toughest threat that MDA claims to be able to deal with.

It is not credible that Iran (or North Korea) would be reckless enough to

attack Europe, or the United States, with a single missile - with no decoys or countermeasures - and then sit back and wait for the consequences? As we know, ballistic missiles have return addresses.

Thus, if Iran were reckless enough to attack Europe or the United States, they wouldn't launch just one missile, and if they launched several missiles or used decoys and countermeasures, current U.S. missile defenses would not be effective.

Further, if Iran or North Korea were intent on attacking Europe or the United States, and if they believed that U.S. missile defenses worked, they likely would emulate Russia. Against Russian or Chinese ICBMs launched en masse, the most futuristic missile defenses would not be effective. This fact was recognized by Congress in 1974, when lawmakers voted to shutdown the Safeguard system (which relied on nuclear-armed interceptors) almost immediately after it was declared operational. It had become obvious that the system could not defend against an all-out Soviet attack.

We will not have a safer world if U.S. missile defenses cause Iran, North Korea, or other countries to build up vast arsenals of ballistic missiles to overwhelm our defenses.

U.S. missile defenses could create new dangers for America, stimulating a new arms race, and encouraging U.S. adversaries to build more and more missiles so as to overwhelm our defenses. By responding to the perceived "unsophisticated threat," we are motivating new threats for which we do not have technical solutions.

Decoys and Countermeasures

Decoys and countermeasures are the Achilles Heel of missile defense, are the Achilles Heel of the missile defense systems being deployed in Alaska and California, and also of the U.S. missile defense system proposed for Europe.

To use a popular analogy, shooting down an enemy missile going 17,000 mph out in space is like trying to hit a hole-in-one in golf when the hole is going 17,000 mph. If an enemy uses decoys and countermeasures, missile defense is shooting a hole-in-one when the hole is going 17,000 mph and the green is covered with black circles the same size as the hole. The defender doesn't know which target to aim for.

In 1999 and in 2000, the U.S. Intelligence community provided assessments that North Korea or Iran would soon know, if they didn't already, how to field decoys and countermeasures.

A September 16, 1999 report by Robert Walpole, National Intelligence Officer for Strategic and Nuclear Programs, stated:

"Penetration Aids and Countermeasures
We assess that countries developing ballistic missiles would also develop various responses to US theater and national defenses. Russia and China each have developed numerous countermeasures and probably are willing to sell the requisite technologies.

Many countries, such as North Korea, Iran, and Iraq probably would rely initially on available technology - including separating RVs, spin-stabilized

RVs, RV reorientation, radar absorbing material (RAM), booster fragmentation, low-power jammers, chaff, and simple (balloon) decoys - to develop penetration aids and countermeasures.

These countries could develop countermeasures based on these technologies by the time they flight test their missiles." [5]

This assessment is not surprising since decoy and countermeasure techniques are described in the public literature and on the internet.

As Mr. Walpole noted, decoys can include objects that provide a close representation of the attacking enemy missile or its warhead encased in a re-entry vehicle. For example, a simple balloon in the shape of a cone – the shape of a re-entry vehicle – would travel out in space as fast as the RV itself and be confusing to the defender. An enemy missile could carry many of these balloons that are inflated at the time of stage separation and travel along with the re-entry vehicle and other objects, such as the "bus" that first housed all these objects, and debris from stage separation.

The debris from stage separation itself could act as a kind of decoy as that debris might reflect, turn, or tumble in a manner resembling the target re-entry vehicle.

Countermeasures could include chaff or debris deliberately scattered by the attacker with the target missile or warhead to reflect the search radar of a missile defense system. This might be short metal wires – like paper clips - of the proper length, or bits of metal foil to reflect the radar, or to cloud the view the radar might otherwise have of the target.

For missile defense systems that operate in the infrared, infrared burning pellets can be released by the attacker to confuse the defender. Even the angle of the sun can be important, heating various objects in the target cluster by different amounts. The five early, successful, GMD flight intercept tests that included simple round balloon decoys were all conducted so that the sun was shining away from the interceptor and "over its shoulder" so that the sun was not shining into the "eyes" of the infrared seeker on the interceptor. As a result, the sun was heating up those balloons and making them hotter and easier to spot than they would have been at other times of the day or at night.

Different missile defense systems prompt the use of different sorts of decoys or countermeasures by the offense. For example, the laser being developed for missile defense, the Airborne Laser, is to be a high power laser carried in a jumbo 747 aircraft. But if the enemy paints their missiles with an ordinary white paint, a white paint that is 90% reflective to the laser, then 90% of the laser energy bounces off. [6] To compensate for this, the Airborne Laser would need to be ten times more powerful and would need an aircraft bigger than a Boeing 747.

For radars, jamming or electronic interference with the radar is another common countermeasure. An enemy also can apply radar absorbing materials to the attacking missiles or re-entry vehicles to reduce their radar cross-sections and make them "stealthy" and less easily detected by radar.

In all out battle, missile defense radar and interceptor sites would be prime targets for an enemy.

The Inadequacy of the U.S. Ballistic Missile Defense System

Some would argue that if not a realistic threat today, North Korea and Iran may become a real threat in the future. However, the MDA FY-2008 budget request contains a remarkably candid statement: "This initial capability is not sufficient to protect the United States from the extant and anticipated rogue nation threat."

The full context of this statement is provided below:

> **"Close Gaps and Improve this Capability.**
>
> This initial capability is not sufficient to protect the United States from the extant and anticipated rogue nation threat. We therefore must close the gaps in the system and improve its capability to keep pace. Three key elements of this effort are additional Aegis BMD sea-based interceptors, the introduction of four transportable Terminal High Altitude Area Defense (THAAD) fire units consisting of radars and interceptors, and the introduction of a land- and sea-based volume kill capability (Multiple Kill Vehicle program) to address potential countermeasures. Additionally, to ensure full coverage of the United States against threats from the Middle East, we will upgrade an Early Warning Radar in Thule, Greenland. This radar, in conjunction with the radar at Fylingdales, UK provides the ability to track threats to the U.S. and Europe from the Middle East. Because we must protect these radars or risk losing the "eyes" of our system, we are planning to field ground-based interceptors and an associated ground-based midcourse radar site in Europe. This achieves four goals: protecting the foreign-based radars, improving protection of the United States by providing additional and earlier intercept opportunities; extending this protection to our allies and friends; and demonstrating international support of ballistic missile defense."

Clearly, the MDA sees the proposed missile defenses in Europe as a first

line of defense to protect existing radar sites in Greenland and the United Kingdom necessary to defend the U.S., not first and foremost to defend Europe.

And it certainly confirms the Union of Concerned Scientists report, *Technical Realities,* four years ago, which stated:

"The ballistic missile defense system that the United States will deploy later this year will have no demonstrated defensive capability and will be ineffective against a real attack by long-range ballistic missiles."

Indeed, today the GMD system still has no demonstrated effectiveness to defend the U.S., let alone Europe, against enemy attack under realistic operational conditions.

The MDA budget statement above also shows that an enemy bent on attacking Europe or the United States would attack the "eyes" of the system first.

Applying traditional military strategy, an enemy of Europe or the United States would first attack the radar proposed to be built in the Czech Republic as well as the existing radars in the United Kingdom and Greenland.

The Limitations of GMD Flight Intercept Tests

Flight intercept tests with parts of the GMD system have been ongoing for nearly a decade.

In 2000, there had been three GMD flight intercept tests; as of today there have been 13. Seven of these 13 tests have been successful, but six have

failed. By that measure the system is doing slightly better than 50%. But in the last five years there have only been 5 flight intercept tests, and three of those have failed, a success rate of only 40%. Two failures occurred when the interceptors failed to get off the ground. Those two failures occurred for different reasons, but twice in a row, GMD interceptors failed to get out of their silos.

Thus, in the past five years there have been just two successful GMD flight intercept tests. At that rate, it would take the Missile Defense Agency 50 years before they could be ready for realistic operational testing. The MDA still must carry out successfully about 20 more flight intercept tests of different types before the system might be ready for realistic operational testing. If they do not improve their rate of success, it could take them 50 years to achieve 20 successful flight intercept tests.

From a target discrimination point of view, during the past five years the flight intercept tests have been simpler and less realistic than the tests in the first five years. None of the GMD flight intercept tests have included decoys or countermeasures during the past five years.

In addition, developmental tests also are needed to demonstrate that the system can work at night or in bad weather, can work when the sun in shining in a disadvantageous direction, can work when the enemy re-entry vehicle is spin-stabilized to minimize its radar cross section, and alternatively can work when tumbling and not spinning, can work when multiple attempts are needed to bring down a single target, and can work when more than one missile is launched by an enemy.

The MDA has fallen far behind in demonstrating these capabilities. Consider seven examples:

1. In the Clinton administration, the first test with a tumbling enemy RV [7] was planned to have been in early 2001, but it hasn't happened yet. So that's a slip of at least 7 years if MDA would try a tumbling RV soon, which is unlikely.

2. The first nighttime test [8] was to have been on December 11, 2002. It still hasn't happened either. So that's at least 6 years behind schedule if they tried a nighttime test later this year. Also unlikely.

3. The first test with decoy balloons that closely resembled the target RV was to have been in the Summer of 2002. Again, no chance this will happen any time soon.

4. In March 2002, MDA told Congress the first GMD test with multiple targets, that is, with several mock enemy missiles launched at once could take place as early as 2005. Now it is unknown when that might happen.

5. The MDA has never had a successful flight intercept test where the target is launched from Kodiak and the interceptor from Kwajalein, that is, a long-range flight intercept test more closely resembling a real ICBM trajectory.

6. In past flight intercept tests, with the interceptor based at Kwajalein, MDA has waited until the mock enemy target launched from Vandenberg

nearly reached Kwajalein before attempting an intercept.

This maximized the time to track the target and be sure of its trajectory, but left too little time for a second try if the first try missed. The Missile Defense Agency has said that their intended mode of operation will be to try more than once to hit an enemy target to increase the probability of success. But to do this requires taking the first shot much earlier so that there could be time for a second, third, or fourth attempt, something they've never tried.

7. The MDA also has never demonstrated in a flight intercept test that they can redirect or steer the Exo-atmospheric Kill Vehicle (EKV) with successive In-flight Target Updates to the correct target despite other confusing objects or decoys in the target cluster. To discriminate between similar looking or confusing objects, the system will have to be able to redirect the EKV in real time to focus on a new object different from another object the EKV may have picked out incorrectly. This has never been demonstrated in a GMD flight intercept test.

A Pervasive, Enduring Problem ~ Not a "Glitch"

Even a single technical issue can be intractable despite years of trying to solve it. The difficulty of resolving even a single technical issue was revealed in a recent GAO report. [9] The GAO report stated:

"Second, confidence in the performance of the BMDS is reduced because of unresolved technical and quality issues in the GMD element. For example, the GMD element has experienced the same anomaly during each of its flight tests since 2001. This anomaly has not yet prevented the program from achieving any of its primary test objectives, but to date neither its source nor solution has been clearly identified."

The GAO is describing an EKV anomaly that has persisted in GMD flight intercept tests for seven years, since 2001. If not corrected this anomaly could cause the EKV to temporarily lock onto the "wrong" target and miss the real target.

To solve the problem MDA implemented improved cable shielding, which was to have been tried out on a flight intercept test on December 11, 2002, but that test failed for other reasons when the EKV failed to separate from its booster.

The next opportunity to confirm the effectiveness of the shielding fix in a flight intercept test came two years later, but that test failed when the interceptor failed to get off the ground (December 15, 2004).

The EKV problem was then to have been corrected in a test three months later. That test also failed when it became the second flight intercept test where the interceptor failed to get out of its silo (February 13, 2005), although for different reasons than the first.

The EKV anomaly still has not been corrected, and was exhibited again in the two most recent flight intercept tests (September 1, 2006 and September 28, 2007).

After the better part of a decade, the MDA has not found the root cause of this unresolved problem.

Cost and Cost Effectiveness at the Margin

As noted earlier the United States has already spent over a hundred billion dollars on missile defense.

In FY-2009 the president's budget request asks for $12.4 billion for DOD spending on missile defense. The Missile Defense Agency itself accounts for $9.4 billion of that total.

On top of that, the DOD FY-2009 budget request calls for another $62.5 billion to be spent over the next five years.

If the Congress supports this spending on missile defense, by the end of 2013 over $110 billion will have been spent just since 2003, not counting the missile defense spending in the previous 20, 40, or 60 years.

Since there are no criteria established for the system, not even the Missile Defense Agency itself can say what the eventual costs might be.

The costs are open ended and there is no end in sight.

Some of the elements of the planned GMD system of systems do not yet exist. For example, SBIRS-High and the Space Tracking and Surveillance System (STSS) are billions of dollars over budget and years behind schedule. The GAO has reported repeatedly on the difficulties with these systems.

If, as the MDA asserts, the system can already defend the United States when two major satellite systems for missile defense – SBIRS-High and STSS – do not exist, why should the Congress appropriate funds for these satellite systems? And if these satellite systems are required, how can the MDA claim that the system defends us today?

While carried in the R&D portion of the DOD budget, the GMD program is one of the biggest procurement programs in history. MDA is planning to buy hundreds of new interceptors between now and 2013. This includes 20 more interceptors for the GMD system in Alaska and California, 111 SM-3 interceptors and 100 Terminal Sea-based interceptors for the Aegis BMD system, 96 THAAD interceptors, and about 400 new Patriot PAC-3 interceptors, and 10 new interceptors for the proposed missile defense system in Poland. This adds up to about 635 new interceptors proposed to be bought in the next five years. The cost for these new interceptors does not include new Navy ships to be bought or modified, two dozen new Patriot batteries, new THAAD fire control systems and FBX radars, nor the proposed new satellite systems, nor all the ground support equipment connected to these systems.

However, the threat being used to justify these enormous purchases has been exaggerated, and if it were real the proposed missile defense systems couldn't deal with it anyway.

This is an example of what Paul Nitze was talking about when he proposed the criteria of "cost effective at the margin."

It is easier for an enemy to increase its offenses than it is for the defender to increase its defenses against those new offenses. It is cheaper for an enemy to build more missiles as the Soviet Union did during the Cold war, cheaper for an enemy to add decoys or countermeasures, and cheaper to change the nature of an attack by firing many missiles at once or by firing them in unpredictable ways.

And if an enemy is going to attack the United States or Europe, the first thing they would attack would be the missile defense radars themselves, as those are the "eyes" of the system. To defend those "eyes" would require building defenses for U.S. defenses, ad infinitum, and would be prohibitively costly.

Incomplete Information for the Congress and the Media

Too often the MDA makes incomplete public statements. Particularly in recent years, both the DOD and the MDA have made statements about GMD effectiveness or capability that are at best inaccurate.

At a March 18, 2003, hearing before the Senate Armed Services Committee, Edward "Pete" Aldridge, U.S. Undersecretary of Defense for Acquisition, Technology and Logistics assessed the effectiveness of the deployed GMD system in the event of an actual attack. In that hearing Aldridge was asked by Senator Evan Bayh (D-Ind.) how effective the system to be deployed in 2004 would be against a North Korean missile launched at the United States.

Aldridge's response was, "As of today the projected effectiveness would be in the 90 percent range."

The Senator followed up, "If you're advising the president of the United States, and there is a possibility of the North Koreans hitting Los Angeles or San Francisco with a nuclear warhead, you are advising him that we would have a 90 percent chance of taking that down before it can get there, as early as the end of fiscal year 2004, and if millions of lives depend on it, that's your answer?" "Yes sir," Aldridge responded. [10]

Undersecretary Aldridge was mistaken. The United States did not have that capability in 2004 and still doesn't today.

The MDA Director at the time was asked later about Aldridge's assessment by a reporter from *Defense News*. The MDA Director gave an academic explanation of how Aldridge could be mathematically correct. The article reports the Director as saying that the initial system would be 90% effective if more than one interceptor was launched at an enemy missile "if you assume a certain level of success for each [interceptor] missile, which doesn't have to be very high, not greater than 50 percent…[and] if you did a math probability calculation and if you use six of those [interceptor] missiles to attack a single incoming warhead. … Secretary Aldridge was very correct. On a pure math basis, [Aldridge] was correct." [11]

Neither then nor since has the MDA conducted a GMD flight intercept test where they demonstrated the capability to bring down an enemy missile by firing six interceptors.

If it would require six interceptors then the proposal to place 10 interceptors in Poland will be inadequate against even two missiles from Iran.

On a more serious matter, the Pentagon may not have given the President accurate information about the capabilities of U.S. missile defenses. In an interview taped at the White House on July 6, 2006, President and Mrs. Bush appeared on *Larry King Live from D.C.*

This was two days after North Korea had tested a Taepodong-2 missile which fell apart about 40 seconds into its flight and flopped into the sea.

At one point Larry King asked the President what would we do if North Korea launched a missile at the US.

Suggesting we had a missile defense system that could shoot it down, the President replied, **"If it headed to the United States we've got a missile defense system that will defend our country."**

The very next day at his news conference in Chicago, the President was asked the question again, and said, **"Yes, I think we had a reasonable chance of shooting it down. At least that's what the military commanders told me."**

When the President said that the ground-based system hadn't had a successful flight intercept test in four years. In the two most recent attempts, the interceptors never got off the ground and failed to leave their silos. And in the only other recent attempt at that time, the kill vehicle failed to separate

from its booster and missed its target.

Another example of incomplete information is the MDA description of the capabilities of the Sea-based X-band radar as being able to discriminate and track a baseball-sized object over San Francisco if the radar were located in Chesapeake Bay. [12]

What MDA doesn't say is that this might be true if the baseball was not moving and was standing still. As Cornell physicist George Lewis has explained, this is because to discriminate and track the baseball as MDA describes would require about a hundred and twenty pulses from the radar integrated over about 3.8 seconds. [13] But in that amount of time, a real enemy missile would have traveled nearly 17 miles and would no longer be in the field of view of the radar. And taking a clear moving picture with the SBX of that hypothetical baseball is something the MDA has not demonstrated. Thus, unless enemy missiles are going to stop in mid-air, and wait for the radar to get a clear picture, this description does not give the Congress a realistic appreciation for the operational capabilities of that radar in battle.

Just last week, in a letter to the Boston Globe, the MDA Public Affairs Director overstated GMD target discrimination capabilities. He wrote, "Your conclusion that the current technology cannot discriminate decoys from actual warheads is likely based on the word of so-called experts - people who have no access to information on advances in decoy discrimination technology because of the highly classified nature of such data. Five successful intercept tests from 1999 to 2002 used the type of

decoys we would expect from countries such as North Korea and Iran, and future tests will introduce more challenging decoys to keep up with expected threats." [14]

I am familiar with those five tests, and the types of decoy balloons used which were not classified. All of those five tests used balloons that did not resemble the target reentry vehicle. Thus, when Col. Lehner uses the word "discrimination" in his letter to the Boston Globe he is talking about discriminating between an elephant and a human, the elephant being the decoy balloons used in those tests that were far brighter than the target RV and of a different shape. However, the MDA has not demonstrated that the GMD system can discriminate between two "elephants," or two "humans," that look alike, that is, decoys that actually resemble the real target, and especially not without advance information about the two objects that no enemy would ever willingly provide.

In those five tests the defender was provided, and used, advanced information about how both the mock enemy target and the balloons would appear to the kill vehicle sensors. To continue my analogy, the defenders were told in advance what the "elephants," - the balloons - would look like, and what the "humans," - the mock enemy warheads - would look like, so that they would know what to look for. A real enemy might do something quite different, as for example, disguising their warheads with decoys that looked similar.

On the other hand, it is helpful that MDA acknowledged what the intelligence community has already said, namely, that if Iran or North Korea

has the technical know how to field ICBMs carrying nuclear weapons and long-range missile guidance systems, it also knows how to field decoys and countermeasures. It is also helpful that MDA acknowledged that the MDA needs to introduce more challenging decoys into its future flight intercept tests.

The Ability to Survive Direct Attack

The major elements of the U.S. missile defense systems are vulnerable to direct attack. For example, the floating Sea-based X-band Radar (SBX) is literally a sitting duck.

So also are the early-warning radars in Greenland and in England, as would be the radar proposed to be sited in the Czech Republic.

Many of the systems of U.S. missile defense program are housed in ordinary buildings providing no more protection that would a common warehouse.

But an enemy needn't bother attacking U.S. missile defense sites with bombs, munitions or Improvised Explosive Devices.

According to the DOD Inspector General in a report released on February 24, 2006, and as reported by *Federal Computer Week*, "the BMD system may have been left wide open to hackers with such serious security flaws that the MDA and its contractor, Boeing, may not be able to prevent misuse of the system." The report suggested that these security flaws made the system vulnerable to hackers who could cripple the missile defense network. [15]

The Nuclear Environment

The Pentagon does not explain it, but we need to remember that if we ever need to rely on missile defenses against enemy ICBMs it would be in an all out nuclear war.

In all out nuclear war some of those enemy missiles will reach their targets, including the ones that U.S. missile defenses miss.

Some enemy ICBMs might be equipped with warhead fuses to go off before an approaching interceptor would reach them.

Some enemy ICBMs might be deliberately triggered to explode at high altitude, to cause EMP effects and disrupt U.S. military command and control including U.S. missile defense command and control systems.

So when we talk about "realistic operational conditions," that includes the effects of the nuclear environment – mushroom clouds, blast, neutrons, x-rays - on U.S. missile defense silos, radars, satellites, and command and control installations.

There is no evidence that missile defense could be depended upon under those conditions.

The Role of Diplomacy

In 1999, former Secretary of Defense William Perry made a series of

diplomatic trips to convince North Korea to stop developing and testing long-range missiles. He was remarkably successful in encouraging them to enact a missile testing moratorium that held for some time. In fact, as news of his success reached the Pentagon, officials there joked: "There goes the threat!" The Pentagon appreciates a good threat to justify its programs, and the joke underscored that the most effective route in dealing with nuclear and missile proliferation threats can be through creative diplomacy, not military technology. Dollar for dollar, Dr. Perry was the most cost-effective missile defense system the United States ever had, and he showed that effective diplomacy is hard to beat.

Unfortunately, the Bush administration did not sustain and support that agreement, especially that the U.S. would stop threatening North Korea, and so North Korea went back to developing long range missiles. Now that Ambassador Christopher Hill is achieving diplomatic success with North Korea, not unlike Dr. Perry's success eight years earlier, people in the Pentagon must be saying, "There goes the threat," once again.

If North Korea and the United States continue to make progress in face-to-face negotiations and in the Six Party Talks, there will be little justification for the presumed-to-be-effective missile defense systems in Alaska, California, and Japan.

And once again, Ambassador Hill has shown that diplomacy, not technology, is the most cost-effective missile defense system.

Implications for the Overall Strategic Environment and U.S. Arms Control

Objectives

At the G-8 Summit in early June, 2007, the strategic implications of proposed U.S. missile defenses in Europe were on full display. In the weeks preceding the G-8 Summit, Russian President Vladimir Putin had set the Bush administration – and the world – back on its heels with talk of Russian missiles aimed at Europe in retaliation for proposed U.S. missile defenses in Poland and the Czech Republic. This set the stage for what the Bush administration thought might be a G-8 confrontation over its proposed missile defense system. Then on June 7, Putin proposed a smart missile defense technical and policy solution that demonstrated that the Pentagon had not adequately anticipated how U.S. missile defenses might be viewed by other countries, especially Russia. Putin proposed missile defense cooperation with the United States by locating the radar, proposed for the Czech Republic, in Azerbaijan

However, Putin's proposal opened up new options for U.S. cooperation that America may need. For example, a second radar site is planned for a powerful, transportable Forward-Based Radar whose location is yet to be determined but is intended to be closer to Iran than the site in the Czech Republic. Negotiations over this second radar site could bring additional Russian objections.

From the outset, the Poland/Czech Republic arrangement had raised questions about who exactly it was defending against? Was it really to defend against Iran, as advertised, or was it an attempt by the United States to locate missile defenses close to Russia and to defend the U.S. from Russia? Or was it part of a broader plan to establish U.S. military bases and a U.S. military presence closer to the Russian border?

In October, at a news conference following Russia-EU summit in Portugal, President Putin drew the analogy with the Cuban missile crisis in 1962 when the Soviet Union based missiles in Cuba that could easily reach the U.S.

"The situation is quite similar technologically for us. We have withdrawn the remains of bases from Vietnam and Cuba, but such threats are being created near our borders," Putin said.

Just as 46-years ago America saw Russian missiles in Cuba as an alarming threat, Russia clearly feels that the proposed U.S. missile defenses in Poland and the Czech Republic are too close to its territory.

Of course, the Soviet missiles in Cuba were offensive, and the proposed U.S. interceptors in Poland are to be defensive. Nevertheless the U.S. proposal is in direct violation of the Joint Declaration issued in conjunction with the Strategic Offensive Reductions Treaty – also known as the Moscow Treaty – signed by Presidents Bush and Putin on May 24, 2002. That Joint Declaration calls for joint U.S./Russian research and development on missile defense technologies, and U.S./Russian cooperation on missile defense for Europe. The Bush proposal to establish U.S. missile defenses in Europe was neither joint or cooperative, and was undertaken unilaterally almost before the ink had dried on the Joint Declaration.

Putin also noted that the U.S. decision to deploy missile defenses close to Russia was presaged by the unilateral withdrawal in 2002 of the United States from the Anti-Ballistic Missile Treaty, which President Nixon and Soviet Communist Party Secretary Leonid Brezhnev signed together in Moscow in 1972.

Given the inconsistency of the U.S. relative to the aforementioned accords, it is not surprising that Russia might regard the proposed U.S. interceptors as potentially offensive. The proposed U.S. interceptor missiles are two-stage variants of a proven launch vehicle, Pegasus missiles, which have enough payload and thrust to carry satellites into low-earth orbit. Accordingly, these missiles could easily carry nuclear warheads aimed at Russia. Russia may not be willing to take the Pentagon's word that these missiles are for defense only, and do not carry a lethal offensive payload. If Russian verification and inspection provisions are to accompany the deployment of U.S. missile defenses in Europe, those agreements themselves could take years.

Also, since the proposed GMD missile defense systems in Poland and the Czech Republic could not cover all of Europe, some members of Congress raised questions about why the United States would chose to "defend" some European countries and not others.

Ever since President Reagan's "Star Wars" speech in 1983, the U.S. has been saying it wants to cooperate with Russia on missile defense but through six administrations under Reagan, Bush 41, Clinton, and Bush 43, real cooperation has not been realized. Putin's proposal opened up new avenues for U.S./Russian cooperation.

Perhaps Russia and the United States will cooperate on missile defenses, but if they acknowledge that these missile defenses are not effective under realistic operational conditions, then the real benefit would be to show that Russia and the United States can cooperate closely on a difficult matter, not to actually defend Europe from Iran.

And if the MDA will not acknowledge that missile defenses are not effective under realistic operational conditions, pretending that U.S. missile defenses actually might work in an all-out war, then they are also pretending that those U.S. missile defenses might work against Russian missiles. If those defenses are located where they might be effective against Russia, this is something which Russia cannot accept.

Russia has indicated strongly that it will not accept U.S. missile defenses being deployed in Eastern Europe. Russia has threatened to pull out of the Conventional Forces in Europe (CFE) Treaty, potentially restarting the Cold War; Russia has resumed strategic bomber training flights; Russia has threatened that it may have to aim offensive missiles at Europe; and Russia has announced the successful development of new offensive ICBMs with maneuvering re-entry vehicles that U.S. missile defenses could not stop.

Russia has also said they want the U.S. to stop the deployment of attack weapons in space, which they also find threatening.

Will our adversaries just build more and more ballistic missiles to overwhelm our missile defenses? Will they turn instead to cruise missiles, against which our ballistic missile defenses are helpless? Or will they attack us through our ports with containers containing nuclear, chemical or biological weapons? And what about terrorism, against which missile defenses are useless?

By spending such colossal sums on ballistic missile defense it is as if we have defined how our adversaries will attack us. We have declared that our

adversaries will use ballistic missiles first and foremost – not cruise missiles, not cargo shipments, not terrorism – even though our ballistic missile defenses are not effective against realistic ballistic missile threats. And we are choosing to ignore the international consequences of that choice, as well as the budgetary and technical consequences.

Just as the United States needs to think through how other countries may react to U.S. missile defenses, so also do NATO, Poland, the Czech Republic, and Japan.

For example, one option for the Poland or the Czech Republic is to make a decision similar to that made by Canada in 2005, when Canada decided not to participate in U.S. missile defenses. While still committed to NORAD, Canadians were skeptical that U.S. missile defenses would be effective. Also Canadians did not want to contribute to an arms race in space, and were concerned about the costs.

Interestingly, on January 3, 2008, the South Korean Defense Minister announced that South Korea also will not participate in the overall U.S. missile defense system, preferring to sustain their Sunshine Policy with North Korea. [16]

Poland and the Czech Republic each have their own point of view, but they share some concerns in common. Neither country faces a threat from Iran, but by hosting U.S. missile defenses in their territory they could motivate new animosity in Iran and other Muslim populations towards Poland and the Czech Republic.

In an actual ballistic missile defense battle, Poland and the Czech Republic would become the first targets that an enemy would attack, as simply a matter of ordinary military tactics.

By attacking the proposed Czech radar, an enemy could blind the system so that it could not see attacking missiles, and by attacking the interceptors in their silos, an enemy could disable the interceptors themselves.

Taken more broadly, Europe as a whole also does not face a threat from Iran, but by cooperating with the U.S., Poland and the Czech Republic might cause Europe to become a more frequent target of terrorists or even to be viewed less favorably by Iran.

Also, to the extent that Russia sees the proposed U.S. missile defenses as a threat, Russia might retaliate in some ways towards Poland or the Czech Republic, especially if U.S./Russian relations turned unusually sour. For example, President Putin indicated last year that Russia might target Poland and the Czech Republic, and threatened to deploy Russian medium-range offensive missiles in the Russian enclave of Kaliningrad on the Polish border.

Conclusion

The level of debate both in America and in Europe has not been adequate to inform the public about the limitations and liabilities of missile defense.

Thanks to belated but successful negotiations with North Korea, and a new National Intelligence Estimate for Iran, there appears to be no urgent threat, and if there were U.S. missile defenses are not adequate to the task, because

of the artificial constraint that an enemy would only attack with one or two missiles, and would use no decoys or countermeasures.

The U.S. proposal to establish missile defense sites in Poland and the Czech Republic has alienated Russia to a degree not seen since the height of the Cold War, and for no good purpose since the proposed U.S. system in Europe has no demonstrated capability to defend the United States, let alone Europe, under realistic operational conditions.

It is a truism that Americans and the U.S. military have a tendency to count on technological breakthroughs to solve thorny national security problems. Many Europeans hope that U.S. technology could be relied upon to solve international conflicts, too. Technology has produced some amazing advances, such as personal computers and the Internet which have changed our lives at home and at work. But too often America relies on technology as the first, best hope to save us from our problems. This is apparent in fields as diverse as defense, medicine, and the environment. By appealing to a single-point technological fix, we hope we can avoid dealing with the long-term problem. In national security, as in other fields, we use our hope for technological relief as an excuse to avoid dealing with our adversaries – sometimes at a very high cost in political and economic terms; sometimes in dangerous self-delusion about our own military capabilities in the global environment in which we all exist.

End Notes

[1] Reference: Enabling Joint Force Capabilities, DSB, 2003.

[2] See Congressional Budget Office, "The Long-Term Implications of Current Defense Plans and Alternatives," various years.

[3] 2007 Space and Missile Defense Conference, "Future Opportunities and Challenges facing our National Security with particular emphasis on the Emerging Missile Defense Threats and Space Operations." August 14, 2007.

[4] White House Fact Sheet: Defending America and Its Allies Against Ballistic Missile Attack, *President Bush Explains Need For Missile Defense System In Europe, Discusses Progress Defending America From Attack,* Office of the Press Secretary, October 23, 2007.

[5] Statement for the Record to the Senate Foreign Relations Committee on Foreign Missile Developments and the Ballistic Missile Threat to the United States Through 2015, by Robert D. Walpole, National Intelligence Officer for Strategic and Nuclear Programs, September 16, 1999.

[6] For example, see work on reflective white paint by NASA et al.

[7] A test with a tumbling RV is important because an enemy might no"spin up" its warheads for greater accuracy. If aiming at Los Angeles an enemy doesn't need accuracy. Sometimes in tests the U.S. will have trouble spinning up an RV and it will tumble. An enemy could have that trouble also. A tumbling RV presents a "blinking" signal to the GMD sensors. But other objects in the target suite - traveling along in space with the warhead RV - are tumbling also, for example the bus, and other pieces of metal or debris from stage separations. If the GMD system cannot tell one object that is tumbling from another, it won't know which one to aim for.

[8] Nighttime tests are important because the GMD system uses infrared heat sensors to "see" the target. At night the enemy reentry vehicle may not have been exposed to the heat of the sun, and so it could be colder and harder to see.

[9] "Assessment of Progress Made on Block 2006 Missile Defense

Capabilities and Oversight," Statement of Paul Francis, Director, Acquisition and Sourcing Management. Page 7.

[10] March 18, 2003, hearing before the Senate Committee on Armed Services.

[11] Gopal Ratnam, "Delay May Slow Missile Defense Effort, Kadish Says," *Defense News*, 14 April 2003, p. 34.

[12] For example, testimony by MDA Director Henry Obering before the Defense Subcommittee of the Senate Committee on Appropriations, April 25, 2007, where in response to a question from Senator Byron Dorgan, Lt. Gen. Obering said, "If we place it in Chesapeake Bay, it could actually discriminate and track a baseball-sized object over San Francisco."

[13] G. Lewis, draft, "The U.S. Missile Defense Radar Program," April 5, 2008.

[14] Letter to the Editor, Boston Globe, Rick Lehner, U.S. Missile Defense Agency, Washington, DC., April 11, 2008.

[15] DoD Inspector General (IG) report, *Information Technology Management: Select Controls for the Information Security of the Ground-Based Midcourse Defense Communications Network* (D-2006-053) (http://fcw.com/article92640-03-16-06-Web)

[16] "S. Korea Opposes Joining US Missile Defense System" The Korea Times, January 3, 2008

Mr. TIERNEY. Thank you very much.

I want to thank all four of our witnesses for their testimony and commend their written testimony in full to the members of the committee, because you got to synopsize most of it, some of you all of it, but I think all of it as written is very worth reviewing.

We are going to proceed to questions and answers and try to do 5-minute rounds, but, again, we are going to be a little bit over the time on that if we need be.

Mr. Lynch, if you are prepared, I am pleased to let you go first. I know there are some other votes. I will let you and Mr. Franks go first, and I will just stay through the votes.

Mr. LYNCH. Thank you, Mr. Chairman. I appreciate that. I want to thank you for holding the hearing, and the ranking member as well.

And I want to thank our panelists for sharing their perspective on this.

It just so happens this weekend, after visiting Iraq, I had a chance to stop in Brussels and talk to the NATO folks, and this issue came up. Let me just say that I came away from my meeting with our Ambassador and also other folks at NATO with the sense that this was going ahead, that this process of locating missile defense units in Czechoslovakia and Poland was going forward.

And while I spoke on behalf of this committee to say that we had great reservations and that we were not on the same page with that idea from the administration, it is alarming that at least there are some in the administration who are just proceeding full speed ahead with this.

I would like to ask you, Mr. Coyle—I thought your testimony was very helpful. All of the testimony was helpful. But the testing protocols that have been used in the past, I notice that you noted that since 2000 there have been 13 tests, and 6 were not—well, basically, 6 were failures; 7 were successful. But, more alarmingly, since 2003, the more recent tests, five tests since then, only two have succeeded, and three have not. And, yet, here we are, going forward with a program that could be hundreds of billions of dollars. And, as you have noted in all the testimony, there seem to be valid countermeasures that would make this expenditure a nullity.

What would you see as being—if we were going forward with trying to vet this system, what would the next step be for us, for the members of this committee? If we wanted to get a sense of the workability of this system, what would be the next step, based on your own assumptions? Not the assumptions of the administration, but your own assumptions.

Mr. COYLE. Thank you, Mr. Lynch.

The Congress has required in, I believe, the Fiscal Year 2008 Defense Authorization Bill, the Congress has required the Pentagon, through its Director of Operational Tests and Evaluation, to provide a report as to whether or not the proposed missile defense system for Europe that you mentioned at the beginning of your question would work, would be effective with high reliability under realistic conditions. They required a report, would it work or would it not work with high reliability under realistic conditions.

I think NATO would be smart, and for that matter so would Poland and the Czech Republic, to require exactly what the U.S. Con-

gress has asked for, is to show me—you know, I am from Missouri—show me whether this system would work with higher reliability. I think that same approach could work for the program that is being conducted here in the United States.

Basically, what we have with the GMD program and with several other missile defense programs is a procurement program masquerading as an R&D program. It is an R&D part of the budget, which is fine; that is where it belongs, it is still an R&D program. But we are buying massive amounts of gear, of equipment, and deploying it all over the world without knowing how effective is.

I think the Congress could basically apply the same standard that it has already applied to the proposed systems in Europe to work that is ongoing by the United States.

Mr. LYNCH. Thank you.

Thank you, Mr. Chairman.

Mr. TIERNEY. Thank you.

Mr. Franks, you are recognized for 5 minutes or more.

Mr. FRANKS. Thank you, Mr. Chairman.

Let me first say, sir, I just want to express sincere gratitude that you would allow me to speak here. It is not something that you have to do. To the entire committee and the staff, this is a courtesy, and I fully realize that and truly appreciate it.

As it happens, I am a member of the Strategic Forces Subcommittee on the Armed Services Committee, and this issue has been one of great interest to us and one that we have tried to work in bipartisan fashion on the committee. In fact, Mrs. Tauscher is holding oversight hearings tomorrow.

So let me just begin by saying I wish that we did not have intercontinental ballistic nuclear missiles in this world. I wish they did not exist. But since man first took up arms against himself or his fellow human beings, there has also been offensive weapons, and the effort has been to build a defensive response to those. And, unfortunately, that matrix continues forward.

And when it comes to intercontinental ballistic missiles with nuclear warheads on them, I believe that it is vital that we have the best defense that we can devise, even if it is not perfect, given the fact that if one lands in one of our major cities, 100,000 people will die in a blinding moment, and 400,000 or 500,000 more will die within a week or two or three.

So, it occurs to me that even though many things that the panelists have said as far as the system being imperfect are correct, it does remain that we need the best defense that we can. The threat does exist. And I would certainly be open to any better answers.

But as of December 31, 2007, we have begun to do some things that are pretty significant. We have fielded 21 ground-based interceptors at Fort Greely, AK, and three more to Vandenberg, and we are now able to provide a limited defense against a threat from North Korea. We have also upgraded 10 of our Aegis ships for ballistic missile defense capability, and we have armed them with 21 SM–3 interceptors to devise a defense against short-, medium- and intermediate-ranged missiles. Seven more destroyers have also been put in place for long-range surveillance and tracking ability.

It is important to note that 26 of the last 27 flight tests for missile defense have been successful, 26 of the last 27. There were those that, some years ago, when it seemed that the only possible hope that we would have would be mutually assured destruction, said we would never hit a bullet with a bullet in the sky. That is not true any longer. We can hit a dot on a bullet with a bullet in the sky these days. And it is a significant thing.

Two things have changed since this debate first began. First, we now know that missile defense is possible. It is not perfect, but it is certainly possible. We also have seen Jihadist terrorism come up on the scene, who cannot be deterred by the threat of response and who—some of their leaders call Armageddon a good thing.

These are situations that we need to consider.

Related to countermeasures, I can only assure you my community hears of these issues all the time, and our people are at work, and I believe progress will be made. And I believe it is always bad to bet against the innovation of the American people.

Mr. Coyle mentioned that to hit these missiles is like hitting a hole in one when the hole is moving at 17,000 miles an hour, and he is precisely correct. But that is also precisely what we did with a satellite coming in at 17,000 miles an hour in a situation where we could never have orchestrated such a scenario. We didn't just hit the satellite. We had to hit the center force of the satellite with the hydrazine tank, and we did that. We did that from a ship floating in the ocean in the Pacific, you know, and the target was 250 kilometers away in space. This is an amazing, amazing accomplishment. Again, it is not perfect, but we have made some tremendous progress.

I am reminded that two airplanes hitting two buildings in New York cost this economy nearly $2 trillion, and I don't even know how to begin to estimate what one ballistic missile from Iran hitting New York with a 100-kiloton warhead on it would do to our economy and to our concept of freedom. I can only suggest to you that it would be very profound.

And I know there may be a day when people will look at us and say you built a system that we didn't need, it was expensive, it cost hundreds of billions of dollars; and we may have to apologize to the American people for doing that. And, Mr. Chairman, I would be glad to come back to this committee and stand in any line and gratefully and humbly apologize to the American people for building such a system that we did not need.

But in the world that we live in, I fear that Iran and other countries, terrorist groups, may be able to come up with something that again would change our concept of freedom forever; and I don't want to be one to have to apologize to people that have survived such a tragedy and say to them we failed to build a system when we could have.

And, again, I can't express enough gratitude to all of you for allowing me to speak. You are erudite people on the committee here and on the panel. I appreciate their perspectives. I hope that we can work together to turn mutually assured destruction into mutually assured survival. I hope we can work together to save and protect our citizens against potential nuclear missiles, rather than to

avenge them if such a tragedy occurs. And I thank you, Mr. Chairman, for allowing me to talk.

Mr. TIERNEY. Thank you, Mr. Franks. I appreciate you joining us, and I appreciate your comments.

I don't know where to start here. There is a little bit of ground to cover.

Let me start by asking whether or not it is realistic in the view of any of the people on the panel here that Iran or North Korea had they—if they had in any foreseeable or reasonable amount of time the capacity to send a nuclear ICBM to the United States, is it foreseeable by any of you that they would be crazy enough to do that, given the fact that their sending one over has a return address, as Mr. Coyle said? Are you aware of any nation right now that would take that risk?

We will just go right across the board. Ms. Gronlund.

Ms. GRONLUND. No.

Mr. TIERNEY. Mr. Garwin.

Mr. GARWIN. I think that Iran and North Korea are both deterrable. That doesn't mean that we should encourage them to build nuclear weapons and delivery means. But I emphasize that the problem is not apologizing for a system that works. It is apologizing for ignoring the fact that the system that we build will not work because it ignores—specifically ignores the real threat that the short-range missiles that these countries have long possessed can be equipped with nuclear weapons or biological weapons far more readily and can attack the United States. So if not deterrable, then the countries would choose that rather than the ICBM approach.

And you don't need to know much about the defense in order to realize that a warhead enclosed in a large balloon is proof against the hit-to-kill interceptor because it doesn't know where in that balloon the warhead is.

So if MDA will only realize that and acknowledge it, then they might begin to propose fielding multiple warheads, multiple interceptors against each offensive missile in order to sequentially deal with the countermeasures. But if they don't admit it, then they will lead us down the road of false security, of fake cures for the illness, which is where we are.

Mr. TIERNEY. Thank you.

Mr. Kueter.

Mr. KUETER. I believe we need to be concerned about leaders in North Korea and Iran threatening the use of these missiles.

Mr. TIERNEY. No, my question was, do you personally want to say on the stand here you believe either one of those countries would send over a single missile and—just send it over?

Mr. KUETER. I believe they might.

Mr. TIERNEY. That is interesting to know. Thank you.

Mr. Coyle.

Mr. COYLE. I was in Europe a couple of months ago. And talking with people in Europe, they were quite surprised about the missile defenses that are being proposed by the United States for Europe, because they don't see that Iran has any reason to attack them. North Korea is too far away, and they don't see any reason why Iran would attack them. And I agree with that.

Does that mean that Europe should, you know, be careless about future threats? Of course not. But people that I talked with in Europe just didn't understand why they would be the threat.

Mr. Franks spoke about terrorism, and I think that is something that we should be concerned about. But, of course, missile defense is useless against terrorism. It doesn't work against terrorism. So as much as we might worry about terrorism and want to do some things about it, missile defense is not the solution.

Mr. TIERNEY. Thank you.

And I might just note I think it is also unrealistic to think a group of people involved in acts of terror are going to acquire missile technology, have a place to house it, put it together, and be able to send it over again.

I wish Mr. Franks had stayed to hear some of the conversation back and forth. I think it might have been helpful, useful.

Mr. Franks did say he thought 26 of the 27 flight tests were successful. Doctor Gronlund, you want to address that for us? I don't have that recollection, and my statistics don't match up.

Ms. GRONLUND. I do. I think there is confusion about short-range missile defenses and long-range missile defenses, and the number he cited must include a lot of tests of short-range missile defenses. The fundamental difference between the two is long-range missiles spend a lot of time outside the atmosphere, where there is no air and, therefore, no air resistance. And because of that it is very easy to deploy decoys, because they will travel on the same trajectory through space. So it becomes very hard to distinguish one object from another.

That is not true for short-range missiles. They don't spend a lot of time in the atmosphere. There are different kinds of countermeasures, but it is not on the same scale.

And so you see that the Army itself has chosen to pay for some Patriot batteries; and, you know, they obviously have decided that this is something they want to spend their money on. That is not the case with mid-course defense against long-range missiles.

The other key difference is that the only long-range missiles deployed in the world are tipped or have nuclear weapons. So you get into this inherent problem that countries we are seeking to deter, who are seeking to deter us, and that would be only Russia and China, find missile defenses inherently destabilizing. That is not true for short-range missiles, which are generally armed with conventional warheads.

So I think, you know, citing 26 out of 27 is a deliberate muddling of these two very different technologies; and just because we know we can get short-range missile defense to work some fraction of the time has nothing to say about long-range missile defenses and their effectiveness. Neither does shooting down our satellite.

Mr. TIERNEY. I wanted to cover that. Dr. Garwin, you might address that.

You mentioned in your remarks hitting that satellite was a bit like hitting a duck sitting on a pond. Mr. Franks and others, I should say, have made a big deal about that and somehow tried to loop it into some association with our missile defense and the mid-ground-based prospect we have here. Can you clarify that for people?

Mr. GARWIN. Well, I point out that on January 11, 2007, China destroyed one of their satellites in the same way. So they did it first. They did it with the same hit-to-kill approach. Not so hard with a satellite, because it is highly visible, highly predictable. And in fact for many decades I have published proposals to show that space-based defenses really are infeasible because they can be countered by low-tech means, just as China did by lofting SCUD missiles, available by the hundreds or thousands, with a ton of gravel to orbital altitude and detonating there so that the satellite destroys itself by running into the gravel. So very different from striking in mid-course a warhead that does not want to be destroyed.

And you don't need to know much about the defense. If the defense takes seconds to understand the rotational characteristics of the decoys and the warhead, well, all you need to do is to arrange a "Sally Rand," a dance of balloons, little balloons so that you have an ever-changing aspect; and there is nothing that you can count on. It has never been seen before. It will be the first time you see it. And everything could be a warhead. Everything could be a decoy.

In the earlier go-round on missile defense Don Brennan, a very capable political scientist, argued that our allies in Europe demanded missile defense. They were unhappy with protection by means of deterrence against the undeterable Soviet threat.

And then he spent a couple of weeks in Europe actually gauging the sentiment of the leaders and the legislators there, and he came back very chastened. In fact, our allies were quite satisfied with deterrence; and they didn't need and found missile defense to be potentially provocative.

So you must remember that President Nixon negotiated the ABM Treaty of 1972, which denied us any capability of defending the U.S. population against attack by the Soviet Union. And that was in part because of the massive capability that the Soviet Union possessed, but it was in part because of the recognition that we would be unable to defend against—with mid-course intercept—to defend against even a small number of weapons. And that would be even with the nuclear-armed interceptors that were available then and that we fielded in small numbers, a hundred interceptor limit under the 1972 ABM Treaty.

So you really must address the lack of capacity of the existing system and the fact that ingenuity goes both ways. We are not working against mother nature. Ingenious as she is, she doesn't see what we are doing and deploys more systems, more capabilities against it.

The other side is ingenious, too. Technology develops on both sides, and the defense has a much more difficult row to hoe than the offense under these circumstances of intercept in space.

Mr. TIERNEY. Well, I guess that would sort of go to the fact of Mr. Coyle's—I think it was one of Paul Nitze's criteria for this back in the Reagan years, that you have to have the cost-effectiveness on the margin. It would be less costly to increase your defenses than it would be for them to increase their offenses. And that doesn't seem to be the case here.

Mr. Kueter, let me ask you—and I don't want you to think I am attacking you in any way here—but you are not a physicist, are you?

Mr. KUETER. That is correct. I am not.

Mr. TIERNEY. Do you have a science background? I look at your degrees or whatever, and I didn't——

Mr. KUETER. No, sir, I do not have an academic science background.

Mr. TIERNEY. Given you are surrounded by physicists here, people that are pretty well steeped in that order, what do you say when they say what they are saying about the decoys? And what basis do you have for your conclusion that may differ from theirs?

Mr. KUETER. Well, sir, I have talked to the people that are working on the program. I have talked to other physicists that have studied the program. They have assured me to the level that I am willing to come and sit before you today and say under oath that I believe this system is working.

The problem of trying to discriminate countermeasures is very hard, that it has some of the finest people in the world working on developing and studying what the countermeasures that might be deployed against it and devising ways to overcome it, that we have sophisticated algorithms and discrimination capabilities designed to do exactly the job that these gentlemen are describing that the system needs to do, that they have tested it in ground simulations numerous times over the past 6 or 7 years, and that in the year to come we will see the system do what it is designed to do, namely, discriminate against countermeasures in a flight test.

Mr. TIERNEY. That is fine. I would just tell you I have sat through classified and unclassified sessions. I have sat through these same types of assurances for 12 years that have never really come to fruition on that, and that is why I was curious as to what you were basing it on. I was hoping you weren't going to say you were basing it on the same people that have been giving us this line for a dozen years, but it appears to be the case.

Mr. Coyle, you are fairly knowledge about the classified and unclassified aspects of this. Do you have great confidence that the issue of decoys is going to be resolved anytime soon?

Mr. COYLE. It is really a tough, tough problem. You know, it is hard to get a scientist to say that anything is impossible, but it is a really difficult problem. We know how to make balloons in the shape of Mickey Mouse ears, so I am sure that North Korea or Iran can make a balloon in the shape of an ice cream cone, big ice cream cone, which is what a reentry vehicle looks like.

Out in space, that balloon travels just as fast as the reentry vehicle. Out in space, a feather and a lead brick travel just as fast as each other, and so you can't tell them apart easily. If you could somehow magically be transported out into space and could weigh them or touch them, you could tell them apart easily. But very difficult to do that with sensors on a kill vehicle. Just really tough job. And so, no, I don't see that coming to pass.

And that was the whole point of IFT–1A that Dr. Gronlund referred to in her testimony. That test took place when I was in the Pentagon. I oversaw that test, and it was a kind of test that at the time we knew many more like it were to be done. There were sup-

posed to be many more tests, because we knew how difficult this problem would be of discriminating between similar-looking objects. Unfortunately, the results of IFT–1A got misrepresented, and there haven't been other IFT–1As since. So the Pentagon really doesn't have information such as they would have possibly gotten if there would have been a testing program with many complex target sets to look at.

Mr. TIERNEY. Thank you.

I mean, I was looking at Theodore Postal—I think most people on the panel, if not all the people, are aware of Theodore Postal out of MIT wrote a recent op-ed piece in the Boston Globe, April 15, 2008. In it he said, in June 1997 and January 1998, the Missile Defense Agency conducted two proof-of-concept missile defense tests aimed at demonstrating that missile defense kill vehicles could tell the difference between warheads and decoys. The tests were simply aimed at determining if the objects could be observed with enough precision to match what was expected to what was observed. One of the flight tests took no usable data, and the other could not have succeeded because certain decoys accurately mimicked the appearance of the warhead.

I—meaning Ted Postal—believe the Missile Defense Agency made false statements to Congress that the tests were a success, and it modified all of its followup flight tests so that they could never encounter the simple and effective decoys used in the earlier proof-of-concept tests.

Do you members of the panel agree with that assessment. Ms. Gronlund.

Ms. GRONLUND. I am sorry. Would you repeat the question?

Mr. TIERNEY. You want me to repeat the question. Did you hear any part of what I read?

Ms. GRONLUND. Yes, I did. Just the last clause.

Mr. TIERNEY. The last clause of Mr. Postal's or the last clause of mine?

Ms. GRONLUND. Well, back to where I asked you to repeat. Just repeat the——

Mr. TIERNEY. The last part was whether or not you agree with that assessment, Mr. Postal's assessment.

Ms. GRONLUND. I do. In fact, that is why I raised the issue of the IFT–1A test. And I do want to note that I think it was IFT–1B that actually did take some data.

But the underlying assumption was that so you had an array of objects that had a different infrared signature so that they were—they did appear to be different to the kill vehicle, and the kill vehicle had been told in advance what the warhead would look like. And that's not something you would know. So, again, even at that level, which was a proof-of-concept test, it wasn't realistic.

Mr. TIERNEY. And have they then decreased the complexity of the tests?

Ms. GRONLUND. They have. In fact, there is a very interesting table of the planned test program that goes back to that period of time where they did plan to introduce decoys of various types, and it hasn't happened. It's gone. That whole schedule has—you know, it has disappeared.

Mr. TIERNEY. Dr. Garwin, do you agree with Mr. Postal's assessment as well?

Mr. GARWIN. Yes, I agree. I don't necessarily agree that the MDA misrepresented to Congress. I think that the people who spoke to Congress may not have understood. They may, like Mr. Kueter, have talked with people who assured them that it was OK. But they ought to go back and look at the primary data and do it in an adversarial context so that Dr. Postal and the authorities in MDA have a chance to present and to confront one another with their analyses. That is how you come to truth in the scientific field.

Mr. TIERNEY. Mr. Kueter, do you agree with Mr. Postal's assessment?

Mr. KUETER. No, I do not; and I would encourage those that are interested in this topic to ask General Obering and his associates when they appear before you about the ground simulation tests that this kill vehicle has undergone over the last several years at the Adak facility. I think you will learn quite a bit about the capability of this kill vehicle against a countermeasure program.

Mr. TIERNEY. You are talking about the capability of the kill vehicle. You are not talking about real tests. You are talking about simulations, right?

Mr. KUETER. Well, the decision was made at some point in time to flight test the system to make sure that it would work. You have to remember that it ran into significant problems with its booster, as well as quality control issues that precluded the kill vehicle from separating from the interceptor. It was important to make sure that we could get it to work before we started dealing with the problem of complex countermeasures. That is why I believe there are delays in the GMD testing program and why we have not as many flight tests as we all would have liked by this point in time. The September test certainly indicates that we have resolved those booster and quality control problems, and now we are ready to test it in flight against this issue of countermeasures.

The other point that I would make that is different from the first series of flight tests is that we now have much more robust sensor capabilities that allow us to have overlapping fields of vision in space that will help this discrimination and detection capability, in addition to the expansion of the algorithm capability over the last 6 or 7 years.

Mr. TIERNEY. Thank you.

Mr. Coyle, do you agree with Mr. Postal's assessment here?

Mr. COYLE. Yes, I do. I can't emphasize strongly enough that the test IFT–1A is the kind of thing that was originally going to be done, you know, several times, many times so that you could really see what you could do with these infrared sensors. But the Missile Defense Agency has known almost from the outset that they weren't going to be able to do it with only infrared sensors, that it was going to take a variety of different kinds of sensors, and even then it might not work.

So, for example, one of the things that the Missile Defense Agency has talked about over the years is adding to the kill vehicle, in addition to the infrared sensors, two colors of infrared that it currently has, adding to the kill vehicle a radar sensor, some type of on-board radar to the kill vehicle, and then also adding maybe visi-

ble sensors in the visible wavelengths and other types of sensors. And the idea is if we can just get enough different kind of sensors, you know, maybe we can tell. If we get enough information on those targets maybe we can sort through them and figure out which is which and which is the real reentry vehicle.

But it is kind of like the old story about, you know, the two guys in prison. And one guy says, you know, I am really sick of being in prison now. I am going to offer to the king to teach his horse to speak. You know, and the other prisoner says, well, teach the horse to speak? How are you going to do that? And the first prisoner says, well, you know, the king could die, the horse could die, or what the heck, maybe I can teach the horse to speak.

When you talk about, well, if I just get more sensors on the kill vehicle and, you know, if I do enough different things maybe I will finally be able to figure it out, it is a little bit like trying to teach the horse to speak.

Mr. TIERNEY. What about what Mr. Kueter says about all these simulator tests and all this? How does that play in?

Mr. COYLE. Well, the simulations are a fine thing to do. They are an important thing to do. But as the Director of Operational Testing in the Pentagon today has written, those simulations haven't worked out so far.

Mr. TIERNEY. Now even if they did work, there is a difference, is there not, between a simulation and actually using the actual kill vehicle and putting it through some sort of realistic operational type of test?

Mr. COYLE. Absolutely. That is why we do flight intercept tests. You know, simulations are great, but time and again you see when you get into realistic conditions that the simulation didn't really capture the real world, and you get quite different results. Many failures are simply because the simulations didn't capture what really happens in the real world.

Mr. TIERNEY. Let me ask the witnesses, you know, how many tests would we have to run successfully before we really had confidence in the system? You know, if we run and test some aspect of this system and it works once, should we just move onto the next point or is there some standard that we are trying to reach here where we think it ought to operate successfully so many times in a row before we move to the next point? Dr. Garwin.

Mr. GARWIN. We put a lot of effort into this year 2000 report available on the Web, "Countermeasures: A Technical Evaluation of the Operational Effectiveness of the Planned U.S. National Missile Defense System," and the countermeasures that we discuss there are intentionally those that require very little knowledge of the defensive system.

So if we know that it depends on infrared sensors, we have countermeasures that will entirely defeat the system by having not all of the decoys look the same, having a spectrum, a variation of appearances of the decoys which overlap the spectrum of variation of the warheads; and these would never be tested in such a way that the United States would have good measurements of them. Mostly, they would do ground simulations on their side. And it is a lot easier on the offense to do ground simulations because you don't have to take the defense into account.

And that is where perhaps BMD learned that it was really possible to have bomblets for bioweapons with individual heat shields, and so they have taken those things off the threat that they are promising to protect against, and they should now confront the fact that they have no discrimination against these balloons. And if they admit that, then they might have active discrimination. But they won't ever get active discrimination which has a prospect of working unless they admit that their system will not work——

Mr. TIERNEY. What is "active discrimination?"

Mr. GARWIN. Active discrimination means they would take a considerable fraction of their interceptors and arm them with gas clouds, essentially, that would push on the light-weight balloons. And they would also push on the reentry vehicles, but they wouldn't move so much. And so you can in principle have a means of discrimination in that way. But you will never get it unless they admit that their system, as configured now, will not work.

Mr. TIERNEY. What if they use some other type of decoy other than the one that the gas would have an impact on?

Mr. GARWIN. Well, it is not so hard to see in the budget that we have active discrimination. And then the other side would start to think about it, and there are means for countering that.

And you can read about it in some of my papers. A lot of these things have been worked out long ago when the Strategic Defense Initiative was first proposed and the problem was to discriminate against the lasers, space-based lasers, which of course themselves are vulnerable. But even if they were invulnerable they could be defeated in this way, by having a very large number of decoys for the fleeting threat of ballistic missiles.

Satellites can't have decoys, because they must do their job. They are up there for a very long time. So that is another reason why it is a lot easier to do the anti-satellite demonstration than it is to do a demonstration against a properly configured ballistic missile threat.

Mr. TIERNEY. Thank you.

Just another aspect of that. It would seem to me that there are a lot of moving parts of this. We had some testimony a couple weeks ago on how complex this is. So as to each component of this, you know, whether it is the kill vehicle or some other component, how many times should that be tested? Not in a simulation, because I think that is one part of it, but it doesn't tell us how it really works or whatever. How many times should each aspect of that be tested before we are comfortable that, if we really need it, it is going to work?

Ms. GRONLUND. It depends on how comfortable you want to be. And the more——

Mr. TIERNEY. I want to be 100 percent comfortable.

Ms. GRONLUND. You can't. There is no way to be 100 percent comfortable.

Mr. TIERNEY. OK.

Ms. GRONLUND. It is a little bit like flipping a coin and trying to determine whether or not the coin is loaded. So you flip it three times, and it comes up heads three times. Do you say, I am 100 percent confident that this is loaded heads? No. You know, there are odds of that happening.

So you need to—I mean, if you look at how many tests the United States does of its missiles, nuclear armed missiles, to be sure that they are accurate, it is close to a hundred per missile. And a missile is simple. All it has to do is, you know, launch, separate the stages, and boom. It is nothing compared to a missile defense system where it has to react to data coming in. So I mean to really do an honest testing program, hundreds of tests, all the different conditions that could apply, different kinds of countermeasures, you know, different angles of attack, etc.

Mr. TIERNEY. Nighttime?

Ms. GRONLUND. Yeah.

Mr. TIERNEY. Angles of the sun?

Ms. GRONLUND. Exactly.

Mr. TIERNEY. Shards?

Ms. GRONLUND. Yeah, right.

But I want to return, if I may, to the issue of, I guess, really going back to sort of the fundamental issue of could we—could this work in principle, which is what we tried to address in this countermeasures assessment. So it basically—all you need to know, what you need to know about a system is what sensors does it have? Because that is the only means that the system has to judge the difference between object A and object B and figure out if one of them is the warhead and the other one isn't.

Mr. TIERNEY. And that is assuming everything else is working.

Ms. GRONLUND. Yes, absolutely. So this is the best-case analysis for the missile defense, which is exactly what we did there. It turns out that at that time the United States was planning to have a space-based infrared system as well, so there would have been more sensors.

But it doesn't matter if in fact, as Dr. Garwin suggested, you have a lot of objects, that none of them look alike. They have different infrared signatures. They have different radar signatures. Namely, if a radar looks at them, they are all a little different. If an infrared looks at them, they are all at different temperature.

It is a little bit—I am sure either Dr. Coyle or Dr. Garwin have used this analogy. It is a little bit like going to pick up your suitcase at the airport and, you know, there is yellow and there is red, and—actually, mainly there is black, but just assume—and you can sure as heck tell the difference between the red and the green one and the black one and the blue one. But you have no idea which one has the warhead. So you can discriminate, but it doesn't do you any good.

So if you can do that analysis from the get-go, you know, you could basically now proceed. However, if they insist they can do it, then they should demonstrate it through testing. I mean, nothing can be so important that we are willing to field a system that we have no evidence works. I mean, nothing else that we field follows those rules.

Mr. TIERNEY. So if I could ask all of you this, so if we had a system that we could test, how many tests would we run before we are satisfied we are ready to deploy this?

Mr. COYLE. Well, when I was in the Pentagon, there were 25 or 30 tests that were laid out that were going to have to be done. And, basically, those were designed around the idea that you would dem-

onstrate at least once in one of those tests, not hundreds of times, but just once each of the critical issues that you were concerned about.

Mr. TIERNEY. How many critical issues would you estimate there are?

Mr. COYLE. Well, about the same number.

Mr. TIERNEY. 25,000?

Mr. COYLE. 25,000 or 30,000. For example—so that is why in my full statement I said, you know, we need to do a test at night. OK. Probably be nice if you could do several tests at night. But you would want to do at least one where you saw that the system could work at night.

In the early tests that have been referred to already in this hearing, the early tests that were done in the program, the sun was basically shining over the shoulder of the interceptor, of the kill vehicle. And in my old age I am very much aware that I can read a newspaper a lot easier when the sun is shining over my shoulder, lighting up the target, the thing I am trying to read, than when the sun is in my eyes. So all of those early tests, some of which failed, some of which were successful, the sun was lighting up the target, so to speak, so that the interceptor could see it.

Well, you would like to do a test at night where the sun wasn't there. How well do you read the newspaper at night? You would like to do a test where the sun is in your eyes. Can you read the newspaper when the sun is in your eyes? Well, when you go through and you make a list, it is not hard to come up with a couple dozen or more tests where, if you only did each thing once and showed that you at least were able to do it once, you wouldn't need that many tests.

But the problem is they have to be successful. You can't just try it once. You have to succeed. So if you fail the first time or the second time, as has been the case in some of these instances, then you have to repeat them until you finally succeed.

And looking at the last 5 years in particular, the success rate has been so poor, just two successes in the last 5 years, that if you had 20 or 30 tests to do at that rate where it took you 5 years to get two successes, it could take you 50 years before you could get through 20 or so tests. And I think by then the Congress probably would have lost patience.

Mr. TIERNEY. I am not sure of that. If we lost patience, you would think we would have lost it a long time ago, given the track record of this thing.

You know, I am sure that the Pentagon is going to come in here, the MDA is going to come in here and tell us, oh, we can discriminate now. I think—Mr. Kueter, I thought you said that at some point in time, you know, everything is going well. We really came a long way. We can discriminate it. Do any of the other witnesses believe that? Dr. Gronlund.

Ms. GRONLUND. No.

Mr. TIERNEY. Dr. Garwin.

Mr. GARWIN. I think I pointed out in my testimony that they ought to refer to a technical paper, even a classified technical paper, with analyses signed by human beings so that you could subject it to the usual tests. And if we hear only that somebody

says we can discriminate, well, it reminds me of the discussions that we had in the SDI era. I had many technical discussions with people like Greg Canavan, and it turns out that there are lots to be learned by such interchanges, not only by the people who are participating in the interchange but by onlookers who can then understand where the reality lays. So you learn a lot by doing that you miss by not having this technical interchange.

Mr. TIERNEY. Mr. Coyle.

Mr. COYLE. I agree completely. Part of the problem is that the Congress does not have the access to the information that would allow it to do, you know, a good job of oversight. If you don't have the information and the Pentagon just says trust me, you can't really do oversight.

Mr. TIERNEY. I just note for the record that somebody—Mr. Coyle, I think you may recall. I don't know about Dr. Gronlund. You may, also. Earlier this decade, we had some hearings on this; and there were 50 different items that were not mature for this 2004 deployment. And when we had the hearings and we asked for a report from the Government Accountability Office, when the report was put on my desk, it was unclassified. I can tell you it is very unlikely it would have been unclassified if it was good news for the MDA on that. And we tried to get that declassified. We got somewhat of a declassified version, but they also went back and classified some matters supposedly retroactively on this. They have not been particularly transparent on this, have not been particularly forthcoming on what was going on.

There was a mention made of a September test, a big deal on this. And I think it might have been General Obering and somebody at the MDA was running around Europe telling everybody about the September test. Are you all familiar with——

Mr. COYLE. I think a recent test.

Mr. TIERNEY. Recent test.

Mr. COYLE. Yes, there was a test on September 28, 2007 which was successful. It was a successful flight intercept test that hit the target. But it didn't have any decoys or countermeasures on it.

Mr. TIERNEY. Similar to hitting the satellite.

Mr. COYLE. The satellite, also.

Mr. TIERNEY. Were those similar or were they totally different?

Mr. COYLE. Totally separate. This was not the satellite test. This was a flight intercept test of the GMD program, 1 of the 13 they have done so far.

Mr. TIERNEY. That is the one where they are seven and six? Thirteen tests?

Mr. COYLE. No, it just happens to be the most recent. The one that was on September 28, 2007, is the most recent GMD flight intercept test. There hasn't been one since then.

Mr. TIERNEY. How many have been there total?

Mr. COYLE. There have been 13 altogether.

Mr. TIERNEY. What is the record?

Mr. COYLE. Seven of those were successful; six were unsuccessful. So that is a little better than 50 percent. But in the last 5 years the success rate has only been 40 percent. They have had two successes with five tries in the last 5 years.

Mr. TIERNEY. One of which was in September?

Mr. COYLE. Including the one September 28th of last year, which was a successful test, but it didn't include any decoys and countermeasures. So it was actually a simpler test, an easier test for it to be successful from a target discrimination point of view, because it didn't have even simple balloons on it, as some of the very early tests did.

Mr. TIERNEY. Well, with a record of seven successes and six failures on that aspect of this system, does it give you great confidence, Dr. Gronlund?

Ms. GRONLUND. No, it gives you no confidence. And I do want to point out that these tests are developmental in nature. They are not operational.

Mr. TIERNEY. Can you describe the difference for us?

Ms. GRONLUND. Yes. Meaning that they are still trying to work out the basic technology. This is part of a, basically, a research program. These are not realistic situations where the crew has no warning, where everything proceeds as it would if there were an actual attack.

As far as we can tell, and I think Dr. Coyle discusses this in his testimony, in the real world the interceptor would have to change its course as it got information from the radars while it was flying. And we don't believe that has happened yet, that it is told where to go. So that is what I mean.

And that is perfectly fine if you are developing something new. If you are developing a new car, you don't take it out on the freeway. But if you are trying to figure out if it is going to work at high speeds, you don't take it out on the freeway either, but you do test it. And so there were not anywhere close to that kind of operational testing.

Mr. TIERNEY. And notwithstanding that we are building these things like they are going out of style here.

Ms. GRONLUND. Exactly. And that's—you know, the fly before-you-buy legislation was designed to explicitly avoid this kind of situation where you end up with junk.

Mr. TIERNEY. Dr. Coyle, wasn't that your job at some point in time, to make sure we didn't fly before we buy?

Mr. COYLE. Yes, sir.

Mr. TIERNEY. And at one point in time did this program come under that legislation?

Mr. COYLE. It did. The early tests that we have been referring to, some of those were on my watch.

Mr. TIERNEY. And at some point Congress in its wisdom allowed this program to escape that statute? Is that accurate?

Mr. COYLE. I think you could say that, you know, from a historical point of view a couple of things changed this. The first was the Rumsfeld report, which I think was 1998, if my memory serves me, which talked about the threat, you know, which emphasized the threat requiring missile defenses. And then the law that Mr. Shays referred to earlier that said—where the Congress said you must deploy these things as soon as it is feasible. That 1999 law I think also changed the situation, because now the Pentagon was under pressure to deploy hardware, not to show that it was effective.

Mr. TIERNEY. You know what I want to go back to, because I made a note when Mr. Shays was making that reference. He said

the 1999 policy voted that we would deploy an effective system. Anybody here believe the system is effective? Other than Mr. Kueter. I assume you do? Any other scientist on the board think it is effective?

Mr. GARWIN. I want to comment on that. Because the requirement—and I think Mr. Shays understands that—is to deploy an effective system.

Mr. TIERNEY. Capable of defending us.

Mr. GARWIN. Yes, capable of defending the United States against missile attack.

Now I was a member of the Rumsfeld Commission to evaluate the ballistic missile threat to the United States; and on page 51 of this Countermeasures volume we quote. We say, Rumsfeld Commission report stated, "all of the nations whose programs we examined that are developing long-range ballistic missiles have the option to arm these, as well as their shorter-range systems, with biological or chemical weapons. These weapons can take the form of bomblets as well as a single large warhead."

So to the extent that you believe that there is a threat from people who might use bioweapons, we are not deploying a system that has any capability against bioweapon-armed ICBMs and certainly no capability against nuclear or bioweapon-armed shorter-range missiles which could attack U.S. cities from ships. So we do not have an effective missile defense.

Mr. TIERNEY. Do any of the other—and I know we have been talking exclusively about the mid-range here, but do any of the other aspects of this overall program, would they address the problem? You are talking about ships offshore sending in bio or nuclear.

Mr. GARWIN. No, we have no program in MDA to address that. Sometimes people admit we have no program and we have to get at that after we do the ICBM defense. But that is the problem. We spend so much money on the ICBM defense, which is doomed to failure, that things that might succeed, like boost phase intercept of inter-continental ballistic missiles or a perimeter defense against cruise missiles, gets short shrift. They are not discussed at all.

Mr. TIERNEY. You want to say something, Mr. Kueter?

Mr. KUETER. Yes, I want to completely agree with Dr. Garwin's assessment of the need for boost-phase defense as well as investments in cruise defense. Those are critical priorities that I would commend to your attention.

I would remind you that the Congress did appropriate a small amount of money to begin work on cruise missile defense last year, and that would be something to continue to scrutinize as we go forward.

Mr. TIERNEY. I intend to. I intend to.

Let me just turn to a comment—I don't want to keep you folks here all night, but there was a lot to digest here.

Folks from the Czech Republic came here recently, the chairman of their Foreign Affairs Committee and a number of other members of their House of Deputies on that; and they didn't seem to be considering whether or not the system worked. In fact, several of them told me it was irrelevant to them whether or not the system worked for their considerations as to whether or not they wanted to host the radar. But I don't think that they considered, from the

reactions when we talked about it, the fact that maybe somebody would try to take out that radar. Maybe they might become a target.

And I haven't talked to the folks from Poland on that, but, Dr. Coyle, you bring that up in your report. I mean, one sure way to sort of defeat this whole program, whether or not it will work, would be to go at that, right, to go at some of the so-called eyes of the system.

Mr. COYLE. Exactly. Just basic military strategy. If Iran, say, was crazy enough to attack Europe, first thing they would attack would be the eyes of the system, that proposed radar that is to be located south of Prague. And so it would be the first target. And I think people in the Czech Republic are coming to realize that they would be the first target.

Now, the Czechs have shown themselves to be brave and courageous people throughout history, and perhaps they might be willing to take that risk if the system works. But if the system is not effective, it is not fair to ask them to take that kind of risk.

Mr. TIERNEY. I am looking at some of the testimony here. We went back to the Clinton administration era.

The first test with a tumbling enemy reentry vehicle was planned to have been in early 2001, but it hasn't happened yet. That is a slip of at least 7 years.

The first nighttime test was to have been December 11, 2002. It hasn't happened yet either. That is at least 6 years.

The first test with decoy balloons that will closely resemble the target reentry vehicle was to have been summer of 2002. It doesn't seem that will happen anytime soon.

March 2002, the MDA told Congress that the first GMD test with multiple targets, that is with several mock enemy missiles launched at once, could take place as early as 2005. That hasn't happened yet.

The MDA has never had a successful flight intercept test where the target is launched from Kodiak and the interceptor from Kwajalein, that is, a long-range flight intercept test more closely resembling a real ICBM trajectory. In the past flight intercept tests, with the interceptor based in Kwajalein, the MDA has waited until the mock enemy target launched from Vandenberg, nearly reached Kwajalein before attempting a intercept.

I mean, this seems like there is a lot of testing to be done. If they have been slipping 6 or 7 years in all of these, there didn't seem to be any indication that these were planned to be tested in the near future. So I guess we are looking at a long time before these tests, and you always continue to bring back to me the wisdom of why we continue to spend money on deployment when these haven't been tested.

And for the record, so that other Members hopefully might read this at some point, there were at least seven reports that were done in the last couple of years by the Inspector General for the Pentagon, by the Director of Operations Technology—and Doctor, you get the last word for me there on that—evaluation by the GAO, by the OBM on that; and all of them suggested that this program had serious, serious issues and problems.

The CBO made the recommendation that we reduce the annual amount that we spend on this program from the somewhere around $8 to $9 billion where it was at that point in time down to a number of around $3 billion and force them to get the testing right, a realistic and operational testing before we move to the next stage on all these items on that.

Does that not make sense to people here? I mean, it seems that spiral development, if anybody can explain it—I have never really heard anybody explain it really cogently, but why on this program that costs so much would we be taking this concept of building these things out there? I mean, we have seen in the reports horror stories of parts for the silos that were supposed to hold the missile up didn't work. They keep building them at great numbers a month at huge expense. So it is not serving the purpose of somebody stopping something bad from happening and checking it.

What rationale, if any, is there to continue this program on the basis that it is going, as opposed to reining it in, putting it back under the statute, where they have to prove an element of it is operational and under realistic testing before we move to the next part, before we move to integration, before we start deploying? Doctor?

Ms. GRONLUND. I think the only conceivable rationale is if you don't care if it works and you are assuming it will have a deterrent value. I think somebody here mentioned that today.

And the question is, why would this have more of a deterrent value than the U.S. nuclear arsenal? But there was a report several years ago, I believe General Welch was an author, where the recommendation was actually to reduce the number of tests. Because the more the tests failed the less the deterrent would be worth. So I do think that, you know, there is a way in which certain parts of the government do not care if it works, that this is part of another kind of scheme they have.

Mr. TIERNEY. I have the disturbing news—I want to hear what you have to say, Dr. Garwin. I do have a vote that I have to go make at this point in time. I don't know what the tolerance level of the witnesses is here. Some of you have come a distance or whatever. I would love to come back and continue this, but I don't want to force anybody to stay too long after hours.

And so, quickly, what is the consensus here? If I came back in 15 or 20 minutes, would that be a terrible thing or would people have to go?

Ms. GRONLUND. No, that would be fine.

Mr. TIERNEY. Dr. Garwin.

Mr. GARWIN. Fine.

Mr. TIERNEY. Mr. Kueter.

Mr. KUETER. Fine.

Mr. TIERNEY. Fine. Then we will recess for about 20 minutes or so, and then we will be back. Thank you.

[Recess.]

Mr. TIERNEY. Thank you all for your patience with the continuing saga of votes and no votes. We will get back to the hearing.

Dr. Garwin, you were about to make a response when I interrupted you.

Mr. GARWIN. I don't remember the subject.

Mr. TIERNEY. I am sorry?

Mr. GARWIN. I don't remember the subject.

Mr. SHAYS. You have to remember the subject. Just the question you are allowed to forget.

Mr. TIERNEY. I think it was something Dr. Gronlund said that might have keyed you on to another point on that. We were talking about the number of different tests that were being run and how long a delay this had been and what likelihood we had that this was going to be done any time soon.

Mr. GARWIN. Well, a sensible program has a research phase, a development phase where you decide what is reasonably possible to achieve, and you build the sensors to do that, a ground test so that you can present the sensors with simulated objects to see that it works. If it doesn't work, if you don't understand the sensors, if it doesn't get to low enough temperature, then you find out there.

And then, ultimately, when everything seems to work and when it faces all the challenges that you can pose it and there aren't any uncertainties anymore, then you go to flight tests and see whether it works in fact as it works in theory. And that is not what is done here. That is what we should have been doing, what you would do, paradoxically, in making progress faster at a $3-billion-a-year annual funding than at a $10-billion-a-year annual funding.

At this $10-billion-a-year funding, you are spending all your money on building radars, deploying interceptors, and not facing the problems. You postpone the problems because they are too hard. They take a long time. And in between, in the meantime, you have this enormous funding stream that doesn't buy us anything. So there are two kinds of uncertainties at that point.

Once you deploy—once you test an interceptor, an in-flight test against realistic countermeasures and you believe that it works, or without countermeasures, then there is a question of reliability of the interceptor. Is it 70 percent reliable? A stochastic, a random failure. Is it 50 percent reliable? 30 percent reliable? And that is important to tell you whether you need to fire two interceptors at each missile, three interceptors, five interceptors.

And in the Clinton administration there were such discussions. It was imagined, as I recall, that one would fire about four interceptors at each threatening missile simply because of unreliability, not because they were inherently incapable but because their reliability was not proved. So that is the normal development program, and part of the program is to demonstrate that it will handle the expected decoys.

MDA has never faced the question of whether it agrees with the proposed decoys that the 1999 NIE says are feasible and that could accompany even the first flight test, if they wanted to, the nascent ICBM power. But, beyond that, there are the tests that Dr. Coyle refers to, adverse conditions to demonstrate that they work there. You could have several adverse conditions at once, reducing the number of flight tests, and then the questions of reliability.

So on the interceptors, random failures can be accommodated by launching several interceptors instead of just one. Communications failures can be accommodated by thoroughly testing the system all the time, having multiple communication paths. Computer failures, software failures, well, they may not be testable. You could do it

by intensive simulation, but it is something that needs to be overseen by technically competent people, red-teaming people who are not part of the program but who propose the challenges and review the results.

Mr. TIERNEY. OK. Mr. Shays, do you want to be recognized to ask a few questions?

Mr. SHAYS. Thank you.

I would like each of you to describe to me your general attitude about the missile defense program when it started and your attitude now about it. Just a framework that would describe do you feel like you have already determined your position on this? Are you open-minded about it? And so on.

But tell me your view when this program began. Did you think it would work and now think it has failed? That is my first question. Or did you never think it would work and still think it won't work? Or you thought it would work and now you think—in the past and you think it will now.

I would like each of you to do that.

Ms. GRONLUND. When you ask about the system, are you referring to the ground-based missile defense system?

Mr. SHAYS. Yes.

Ms. GRONLUND. The one that was begun under the Clinton administration?

Mr. SHAYS. Uh-huh.

Ms. GRONLUND. Early on in—let me use his prop here—when that system was under consideration, I participated in a group of people who studied the issue of countermeasures along——

Mr. SHAYS. I don't need to know all the things you did or didn't do. I just need to know your attitude. I need to know—it is a simple question, really.

Ms. GRONLUND. Right.

Mr. SHAYS. Did you think when we began it that it would fail? Or you thought it might succeed? Or you had an open mind? You already decided it wouldn't work?

Ms. GRONLUND. Right. Well, that was—so this exercise is what convinced me that the system could be easily defeated by simple countermeasures. At that point, based on physics, I thought it would not work. But I think, you know, people will disagree with that, and the proof is in the pudding. So it needs to be tested thoroughly against realistic threats, and that has not happened. So I have no evidence to change my opinion, based on analysis.

Mr. SHAYS. Basically, your opinion is, because of countermeasures, whatever we did, you think that the system won't work. And so not a wise expenditure of dollars.

Ms. GRONLUND. Right. That the mid-course—the system designed to shoot down long-range missiles in mid-course will not be effective, and hence it is.

Mr. SHAYS. Because of countermeasures.

Ms. GRONLUND. Because of countermeasures.

Mr. SHAYS. And you believe to date there is nothing that has told you that you are wrong because you don't think the proper tests have occurred.

Ms. GRONLUND. Thank you.

Mr. SHAYS. OK. Thank you. I appreciate it.

Mr. Garwin.

Mr. GARWIN. I have reviewed for the government every ballistic missile defense program since 1953. And so in the SDI days we had mostly space-based defenses. They wouldn't work because they were so costly and vulnerable. Even the space-based small interceptors were too vulnerable. They would be shot down as they were being sent up. We retreated to the interceptors that were ground-based. It was obvious that they would have the problem of decoys and countermeasures. So I never doubted, never expressed any doubt that we would achieve hit-to-kill capability against defined targets. And we did. So that is fine.

My concern was always with the countermeasures. In 1999, I published a proposal for a cooperative boost-phase intercept, especially against North Korean missiles; and I still believe that is a reasonable approach.

Mr. SHAYS. But let me just ask you about this, though. So bottom line is you had real doubts whether the countermeasures—you had doubts whether we could ever develop a system that could confront countermeasures. And so—and to date you have seen nothing that indicates that it can respond to countermeasures. Is that correct?

Mr. GARWIN. That is exactly right. And there are some things that could be done——

Mr. SHAYS. No, but I don't want to go there. I just want—we have limited time. And then but you, unlike some, believe that it is possible for a bullet, in a sense, to hit a bullet as long as there aren't countermeasures.

Mr. GARWIN. Yes, I believe we can hit the warhead-sized bullets with interceptor-size bullets.

Mr. SHAYS. The reason I ask that is some opponents say we couldn't do that. So when they were wrong about that, then they candidly lose credibility. I don't mean credibility, but then their argument seems to me to be flawed.

You wanted to grab the phone, Ms. Gronlund. Why?

Ms. GRONLUND. Well, because I also think hit-to-kill—I mean, we have seen it demonstrated.

Mr. SHAYS. OK. Did you ever believe before, that wouldn't even work?

Ms. GRONLUND. No. In fact, it has been demonstrated a long time ago.

Mr. SHAYS. OK. Well, but with all due respect, we have had hearings where people said that is impossible, it won't happen. We have had hearings in this committee where people have said it. I am not saying you.

Ms. GRONLUND. Right, no.

Mr. SHAYS. So people with tremendous stature say you can't do that—and a lot of Members of Congress.

Mr. Kueter.

Mr. KUETER. At the Marshall Institute, we had real doubts about the ability to effectively conduct mid-course defense when this program was started as the center of emphasis in our missile defense programs in the 1990's. Since, we have become quite convinced that the progress is immensely positive, and we are enthusiastic that we are providing the Nation with an incremental defensive capability.

Mr. SHAYS. So you started having some doubts and have been kind of drawn into this feeling that the system has the potential to work with further research?

Mr. KUETER. Absolutely.

Mr. SHAYS. OK. Mr. Coyle.

Mr. COYLE. Mr. Shays, I support research and development in missile defense. I have worked on missile defense programs myself not only when I was at the Pentagon but before that, when I was at Lawrence Livermore National Laboratory. So I support R&D on missile defense. It is expensive, but I think the United States can afford it.

What I don't support is deploying systems that are not effective and telling the American people or people in Europe or Members of the Congress that the systems are effective when they are not. My issue is particularly that we are spending so much money on hardware right now whose effectiveness has not been demonstrated.

Mr. SHAYS. OK. So your basic view is a system can work, but, like Congress, don't deploy until it works. That is the position of Congress.

Mr. COYLE. Well, when you say a system can work, then you have to say, well, which system are we talking about? And if we are talking about——

Mr. SHAYS. No, you said a system can work, not me.

Mr. COYLE. I am sorry.

Mr. SHAYS. You said that a system could work, that you believe that a system can work. You believe in missile defense, and that a system can work. I thought that's what you said.

Mr. COYLE. I don't believe it is. But if it is I——

Mr. SHAYS. Well, then start all over again. Let's start all over again. What is your attitude about a missile defense system?

Mr. COYLE. What I was trying to say, and I hope I did, was that I support research and development on missile defense, have done——

Mr. SHAYS. Despite the fact that you don't think it can work?

Mr. COYLE. No. Because I think it is important to know what you can do and what you can't do. It is important not to be surprised by your adversary.

Mr. SHAYS. Let me ask you, if you don't think it can work, why should we do it?

Mr. COYLE. Well, I didn't say that I thought it could work and I didn't say I didn't think it could ever work. Because you and I never defined what the "it" was. Are we talking about the GMD system? Are we talking about defense against ICBMs? Or are we talking about PATRIOT? They are very different systems.

Mr. SHAYS. Let's take all three.

Mr. COYLE. So, I think that missile defense against ICBMs in the presence of more than one missile attacking and where those many missiles are using decoys and countermeasures is very tough. As I said earlier in this hearing, it is hard to get a scientist to say that anything is impossible, but I think missile defense against ICBMs, where you are talking about many ICBMs and those ICBMs can use decoys and countermeasures, is very tough. And so I would be most skeptical about that.

You will recall that——

Mr. SHAYS. Go to the next one. You have three in that regard. So you have told me your opinion about that. And so, in the other two cases?

Mr. COYLE. Well, the next one, I would say the next toughest is the THAAD program, Terminal High Altitude, whatever the letters stand for these days. They have changed it.

Mr. SHAYS. It is Terminal High Altitude Area Defense.

Mr. COYLE. Yes. Thank you. That is the next toughest program I would say after the GMD program. The next toughest after that, getting easier, so to speak, is the Aegis system. And then finally the PATRIOT system, which is the shortest ranged of the systems.

Mr. SHAYS. But you think the PATRIOT would be the easiest?

Mr. COYLE. Well, everything is relative here. The PATRIOT itself has had many problems. It missed some of the missiles——

Mr. SHAYS. But that is not what I asked. But you gave, that is the one that is the easiest of the ones you mentioned?

Mr. COYLE. Relatively speaking, yes.

Mr. SHAYS. OK. Is there value to having a missile defense system for an errant missile, a missile that was launched not intended to—where just they went too far and it ended up being launched but there is no decoy. Is there value in having a system—I would like each of you to respond—a missile defense system in those cases?

I mean, in the case of Iran, you know, the Jewish community has this saying, that if your enemy says he is going to kill you, you had better pay attention. And there is no doubt what the present regime in Iran has said. So the question I am asking is, first, if a system—if a country like Iran develops a missile system and there is an errant missile, would there be value in spending the incredible sums of money for a missile defense program; or would it be better just not to? If you could get that kind of system. Because basically you are all—you feel a bullet can hit a bullet, but you feel that if they have decoys, you are going to have problems.

Mr. GARWIN. I don't think it would be worthwhile. You are making a missile; it is equipped with decoys in order to penetrate. It would be automatic if that missile were launched that it would deploy its decoys. So it would not be intercepted, in my opinion, by the system.

I think while you were away I made the point that if MDA, Missile Defense Agency, would admit that their present system does not work, would not work against first generation ICBMs with decoys, then they could get to work on making it work. There are things that they could do that would make it work, but they are not going to do them unless they face the fact that it won't work.

Mr. SHAYS. You and I do agree on one thing, and that is whatever we have we shouldn't deploy it until it works.

Mr. GARWIN. That is right. And we have deployed and it doesn't work.

Mr. SHAYS. So there we may agree, where we have deployed and it doesn't work.

Let me just conclude here. So the bottom line with the Missile Defense Agency, when they have printed a document that says, with the Ground-based Midcourse Defense [GMDs], we have had 6 hits and 1 miss, and the Aegis ballistic missile defense 13 hits and

1 miss, and the Terminal High Altitude Area Defense [THAAD], 4 hits, no misses, and the PATRIOT Advanced Capability–3, 11 hits and 3 misses. Your point would be to me that is impressive to the extent they have done that, but none of this involved the decoys. Is that your position, all of you?

Mr. GARWIN. That is correct. And decoys are difficult with the terminal systems. So those are in fact quite credible, in my opinion, in many cases. Decoys are difficult for the offense to deploy in connection with penetrating the terminal systems.

Mr. SHAYS. Let me just hear from the others, and then I am sure my chairman wants to ask some questions as well. Any other comment on that issue? Yes, Mr. Coyle.

Mr. COYLE. Well, I don't think the numbers are correct, to start with.

Mr. SHAYS. Let me just say, this comes from them. And I am going to submit it for the record, without objection. And if these are not accurate, they are in deep trouble with me, because this is their document. So if I could submit that for the record.

Mr. TIERNEY. Without objection.

[The information referred to follows:]

BMDS Hit-to-Kill Testing History
Since 2001

BMDS Elements	Hits	Misses	No Test / Target Failure	No Interceptor Launch	Notes
Ground-based Midcourse Defense (GMD) Defense Against Long-Range Threats	6	1	1	2	• IFT-10 miss – no EKV separation from booster (December 2002) • IFT-13c (December 2004) and 14 (February 2005) – interceptors not launched • FTG-03 – target failed to reach sufficient altitude (May 2007) • Targets – long-range ICBMs
Aegis Ballistic Missile Defense Defense Against Short- to Medium-Range Threats	13	1	0	1	• FM-5 – miss due to Divert Attitude Control assembly issues (June 2003) • FTM-11 – interceptor not launched due to incorrect system setting aboard Aegis cruiser (December 2006) • Four intercepts of a separating target • Eight intercepts of a unitary target • Targets – short and medium range BMs
Terminal High Altitude Area Defense (THAAD) Defense Against Short- to Medium-Range Threats	4	0	1	0	• FTT-04 – No Test due to target malfunction (September 2006) • FTT-03, FTT-06, FTT-07 and FTT-08 – intercepted a unitary target • Targets – short-range ballistic missiles
PATRIOT Advanced Capability-3 (PAC-3) Defense Against Short-Range Threats	11	3	0	0	• Single TBM intercept tests – six intercepts, one miss • Multiple TBM intercept tests – five intercepts, two misses • Targets – short-range TBMs
Total	34	5	2	3	As of 28 FEB 08

- 34 of 42 terminal and midcourse hit-to-kill intercepts in atmosphere and space since 2001
- MDA achieved 26 test successes in last 27 flight tests since September 2005

Mr. SHAYS. And also, let me just say, there was the article that you made reference to that we had asked them to respond to, and if I could submit that, without objection.

Mr. TIERNEY. I would like to review it first for my own information.

Mr. SHAYS. Certainly. I am not making reference now, but they made responses. And since I wasn't here——

Mr. TIERNEY. Sure. Just leave it open so I can take a look at it.

Mr. SHAYS. Absolutely.

Mr. Kueter, any response?

Mr. KUETER. It is undoubtedly true that the Midcourse Defense Program has not had an active flight test against countermeasures in quite some time. As I tried to explain, there were reasons for the delay in the test program that were wholly unrelated to the actual operation of detecting and destroying an RV in space. It had to do with booster failures, it had to do with quality control problems. That created enormous delays in this program, which they have now come through and successfully shown they have come through in the September flight test of last year that we have previously discussed.

Their plan calls for tests against countermeasures in 2008. I think that when you hear the results of that test we will know a great deal more about this conversation than today.

I have also tried to reference the fact that they have been actively simulating lots of these countermeasures in their advanced computing facilities and what not. I think there is a lot to be learned from that conversation as well.

Mr. SHAYS. Let me just conclude by making this point; that the reason I asked the question is I was extraordinarily skeptical of the Missile Defense Program. Then I concluded—and it would have not been something I advocated. So if I had been President of the United States, I wouldn't have been pushing the program. Then I found myself listening to the rhetoric of so many who said, well, you couldn't possibly do this, this, and this, and mostly the bullet-to-the-bullet. And it appears they are.

So it may be that they set up a straw man, I mean the critics, and now I have become a believer. And so your testimony—some of your testimony to me here is don't be impressed with it because countermeasures could mean that even if you can hit a bullet on a bullet their countermeasures will prevent that. That is the testimony I am hearing, and I will obviously take that in consideration.

My general view is the program should continue. Research should continue. But we sure as heck shouldn't deploy it until we know it works.

Thank you.

Mr. TIERNEY. That was my motion 2 years ago as well as I think every year after that, is just reduce the budget to $3 billion for testing and developing. And I think that got 138 votes. But it seems like common sense.

I just want to clarify a couple things. This report is now part of the record, BMDS Hit-to-Kill Testing History Since 2001, indicates that there were six hits on this, six hits since 2001. That was not the testimony that we had been hearing earlier, so I just want to clarify that. This is the Ground-based Midcourse Defense, Defense

Against Long-Range Threats, says there hits six hits and one miss since 2001. That is not at all the testimony that we received earlier, so I would like somebody to comment on that.

Apparently when no interceptor gets launched, they don't call that a hit or a miss, and I am sure that helps the numbers a little bit.

Mr. SHAYS. But if I might. If it hasn't been launched, it doesn't have a target to hit.

Mr. GARWIN. It is like the excuse that the dog ate my homework. So it depends how you count.

Mr. TIERNEY. If I can finish my question on that. Part of the system is that it gets shot out and actually goes someplace. If it doesn't get up and going, you missed. It just seems kind of ridiculous to say, oh, if it fails at the very beginning of the test, that is not considered a failure. But if it fails somewhere after that, it is a failure. It either got up and it worked, or it didn't get up and didn't work. So the six to one number, again, if I could, it doesn't comport with the numbers we heard in testimony earlier.

Dr. Coyle.

Mr. COYLE. Well, it is correct, as this chart shows, that there have been 10 flight intercept tests in the GMD program. That is correct. I didn't bring the numbers for the other programs. I would be happy to look at those.

But to say that they are not going to count it when the interceptor never gets off the ground, I mean, in battle if the interceptor never gets off the ground, that is a failure. To say they are not going to count it because the target, which is the third column——

Mr. SHAYS. Can I just want to correct one thing? Because I don't want to distort what they said. I read two hits, one miss.

Mr. TIERNEY. Six hits.

Mr. SHAYS. Six hits or one miss. I should have read the other two, because they are saying no intercept to launch. They didn't say that is a success.

Mr. TIERNEY. No. But they didn't say it is a miss either. And that is my point. My point is, two failures to launch brings the missed number to three. So it means you get six out of nine, and a no test target failure, I don't know how you count that, win, lose, or draw, or something on that basis. So that was one part of it. The other part was that—and the testimony was that because they were hitting something in some cases where they were predisposed to know information that they otherwise wouldn't know. Am I correct on that? Dr. Gronlund.

Ms. GRONLUND. Yes, you are. I think maybe a more fundamental problem with this——

Mr. TIERNEY. Let's first do that before I forget, and then you can go to the more fundamental problems. Was it your testimony or Mr. Coyle's testimony or Mr. Garwin's testimony that said that in some of these cases they were given assumptions to work by that nobody would ever know in a realistic test.

Ms. GRONLUND. Correct.

Mr. TIERNEY. Would you explain that a little bit? And then we will go on to your more fundamental issue.

Ms. GRONLUND. They were told where the target—the trajectory of the target in some cases early on. They were told the point in

space to go to. It wasn't really hitting the target; it was both the target and the interceptor going to the same place and then finding each other.

Mr. TIERNEY. So the deck was stacked?

Ms. GRONLUND. The deck was stacked. Which, again, is totally appropriate for a research and development program. But you don't deploy on the basis of that.

Mr. TIERNEY. But it is certainly not considered an operational realistic test.

Ms. GRONLUND. No, no, no.

Mr. TIERNEY. So would any of the six tests that were successful be considered an operational and realistic test?

Ms. GRONLUND. No.

Mr. TIERNEY. Mr. Kueter.

Mr. KUETER. As I tried to describe both in my oral testimony and in the written statement, the September 2007 test had any number of operationally realistic characteristics to it. The other point——

Mr. TIERNEY. That is one. What about the other five?

Mr. KUETER. Pardon?

Mr. TIERNEY. That is one test. What about the other five?

Mr. KUETER. Well, in the other five you are back in the 2003, 2004 time period, where you are doing proof of concept on whether you can do hit-to-kill, where you are working out the capabilities of the sensors that you are building and using for the first time. I think at that point in the development of the program it is perfectly realistic and reasonable for it to have certain artificialities on it. That is no longer the case. They are clearly moving in that direction.

Mr. TIERNEY. Except that I don't think you are going to tell us that the September test was purely under all operational realistic conditions.

Mr. KUETER. Well, you had——

Mr. TIERNEY. No. Under all. Where there was nothing about it that wasn't realistic and operational. Is that your testimony?

Mr. KUETER. Well, no test is completely realistic. It is a test after all. There are certain artificialities involved.

Mr. TIERNEY. I just want that understood. It is not like it was operationally and realistically tested and ready to roll. It was tested with some assumptions. There were predispositions and other things in mind.

Mr. KUETER. Certainly. And it is run against the standards that Dr. McQueary and the Office of the OT&E has established for the MDA to operate under.

Mr. TIERNEY. I guess the edge you hear in my voice is, I have been following this for 12 years and lots of times the standards they set ain't so good. They set the standards so that they can meet them as opposed to what they might realistically expect.

Mr. KUETER. No. I said it is Dr. McQueary's standards.

Mr. Tierney. Whatever. Dr. McQueary or somebody else's standards.

Mr. SHAYS. First, let me say something. I have no dog in this fight. In other words, maybe I am neither an advocate or an opponent, and maybe I should be one or the other but I am not. But according to the Missile Defense Agency, they said: The critics say

we are not testing under operationally realistic conditions. Response—this is their response. The MDA tests are consistent with operational realistic test criteria developed by the test community and the warfighter.

The second point. The MDA flight tests increase in operational realism and complexity with each test, adding increasingly challenging test objectives.

And then the last point. The last two tests, the FTG–02 and the FTG–03a, the long-range elements, the Ground-based Midcourse Defense, were operationally realistic.

That is their claim. And I would like to submit this for the record, because they are going to appear before us.

Mr. TIERNEY. And I think we can ask the witnesses on this point by point. And I have a dog in this fight, and it is that we not waste money building something and procuring stuff before they have been realistically and operationally tested to be effective and moving forward. And that is my dog in this, to the tune of billions and billions of dollars.

Mr. SHAYS. And I am not being critical of your position.

Mr. TIERNEY. No. I don't care if you are or not. But I am telling you, the hunt is we have spent $120 billion to $150 billion so far; we are planning to spend another $65 billion. We haven't realistically tested these things. We are building and procuring before it gets to that point by all reasonable evidence here. And I think that Mr. Nunn was correct, this seems to be more theocracy than technology on this thing. Otherwise, I think people would back up to a realistic number, do the testing, and proceed on that basis.

But the critics—amongst them me being one of them—say that we are not testing under operationally realistic conditions.

Their response, Dr. Garwin. The first one is that MDA tests are consistent with operationally realistic test criteria developed by the test community and the warfighter. Is that so?

Mr. GARWIN. No. Operational realistic conditions means decoys, according to the 1999 NIE. And so long as they do not include the feasible decoys, it is not an operationally realistic test condition.

Now, did I understand that they said the FTG–02 and –03 were operationally realistic? Maybe. But the FTG–03, it says in this testing history, target failed to reach sufficient altitude. So it would have been realistic except it wasn't there. If that is what I understand.

Mr. TIERNEY. Dr. Coyle, do you have anything to add with respect to the comment that MDA tests are consistent with operationally realistic test criteria developed by the test community and the warfighter?

Mr. COYLE. Yes, sir. I don't deny that the tests have become more realistic from a command and control point of view, passing information back and forth. They have worked hard to make the tests more realistic from a command and control point of view. But from a discrimination point of view, no. The way operational tests are done, you ask DIA, the Defense Intelligence Agency, or one of the intelligence agencies to tell you what the threat is, and then you do the test against that threat. The program doesn't get to decide what that threat is, the testers don't get to decide what the

threat is. The intelligence community defines the threat, and then that determines what sort of operational test would be done.

So the answer is, no, they haven't done that.

Mr. TIERNEY. What about the MDA saying that the MDA flight tests increase in operational realism and complexity with each test, adding increasingly challenging test objectives? Dr. Gronlund.

Ms. GRONLUND. Well, I think what Dr. Coyle said about command and control is correct. But from the very beginning, I guess this pre-dates 2001, when they were including decoys, certainly we have gone backward in terms of——

Mr. TIERNEY. You might want to repeat that when he is paying attention.

Ms. GRONLUND. I am sorry?

Mr. TIERNEY. You may want to hold off and repeat that when he is paying attention. This is for his benefit.

Ms. GRONLUND. I will hold.

Mr. GARWIN. Let me say something in the meantime.

Mr. TIERNEY. Let's say it when Mr. Shays can hear it.

Mr. GARWIN. This is just for record. I think you mentioned FTG–03, and I said it didn't reach sufficient altitude. But Mr. Kueter reminds me that it was rerun. It was a rerun of that FTG–03a, and that in fact was a success. In September.

Mr. TIERNEY. I am going to explain that a little bit more, so thank you on that.

Dr. Gronlund, go ahead on yours. You were talking about the increasing——

Ms. GRONLUND. Right.

Mr. TIERNEY. With respect to communications.

Mr. SHAYS. Get that from the record what she was saying.

Ms. GRONLUND. I think we should do complete openness here. So you go ahead and put that in the record.

What I was talking about is the decrease in realism vis-a-vis countermeasures, that early on, pre-2001, there were some tests with decoys. Now, they weren't realistic decoys. But all of that has been dropped. And there were plans for more ambitious tests against countermeasures, which has also disappeared.

So on that track, which is a really fundamental track, that is the reason we are very skeptical about this program. That realism has decreased.

Mr. TIERNEY. Dr. Coyle, agree? Dr. Garwin. Are you disagreeing with it?

Dr. COYLE. Yes. What is true in the statement that you read is that they have done some things to make the tests more realistic. As, for example, improving command and control systems. And I think the Navy and their Aegis system has done that the best. But in terms of other elements of the test that also need to be realistic. Those have fallen way behind.

Mr. TIERNEY. Does anybody there know what the FTG–02 and FTG–03a test, the last two tests of the long-range elements were operationally realistic, what might they be talking about with that—the last two tests of the long-range elements were operationally realistic?

Mr. KUETER. Sir, I believe they are referring to the radars that I mentioned, the X-band radars, the sea-based systems, the forward

deployable systems, as well the other ground-based systems they may have in addition to the interceptor fields.

Mr. TIERNEY. So they are talking about the whole system in this case?

Mr. KUETER. What they would refer to as the integrated BMDS.

Mr. TIERNEY. So those two tests supposedly test all the radar as well as that. What do we know about the FTG–02 and FTG–03a? Dr. Coyle.

Mr. COYLE. Well, both of those tests involved a launch of a target from Kodiak with the interceptor launched from Vandenberg Air Force Base in California. Both times they were successful. What they did not do, however, whatever that statement is about radar elements, they did not in those tests use the Sea-Based X-band Radar. It was watching, it was looking, but it was not hooked up, so to speak, in a way such that it could tell the interceptor, no, dummy, you are going to the wrong thing. First of all, there wasn't anything else for the interceptor to look at. There was no decoy. But even if there had been, the radar was not hooked up to say to the interceptor, no, you are going to the wrong place. Don't go to that object, go to this one over here. They didn't do that in either one of those tests.

Mr. TIERNEY. So what is operationally realistic about that?

Mr. COYLE. Well, indeed, it is not. Because if the system is ever to work, the radar has to be able to tell the interceptor, I know you think you are pointed at the right target but you are not, you have to go over there. And they haven't demonstrated that they can do that.

Mr. TIERNEY. Dr. Garwin, do you want to add anything to that?

Mr. GARWIN. No. I really have no information on it, except to note that the statement is probably true in some sense, that at least they had their radar watching as a bystander, and later on they will connect the radar in the loop. And that will be increasing realism. So I have no reason to doubt that in some sense what they say is true.

Mr. TIERNEY. Well, except that the last two tests were not apparently operationally realistic.

Mr. GARWIN. That is why they say "increasingly."

Mr. TIERNEY. No, they didn't say "increasingly" on this one. They made a flat-out statement: The last two tests of the long-range elements were operationally realistic, they say.

Mr. GARWIN. That is not true.

Mr. TIERNEY. That is not true for the reasons that you stated. Now, somebody in their testimony, I can't remember quite who I read, talked about one of the radars being able to follow a baseball. Was that you, Dr. Coyle?

Mr. COYLE. Yes.

Mr. TIERNEY. That is not this piece, though?

Mr. COYLE. I don't believe that is what you are talking about.

Mr. TIERNEY. Would you tell us what it was in your testimony you were talking about?

Mr. COYLE. Yes. The Missile Defense Agency has told Congress that if the Sea-Based X-band was in Chesapeake Bay and the baseball was over San Francisco, that the X-band radar could discriminate that, could see it and discriminate that. And what they don't

say is that, for the radar to do that, it has to pulse again and again and again, keep taking pulses of that baseball. And after it has done that about 120 times, finally it gets the picture and it says, ah-hah, I can see you, I can see that round object.

The problem is, if the baseball were moving like a real enemy warhead would be moving through space, if the baseball is moving now it is no longer in the field of view. During the time it would take to do those 120 pulses, the enemy reentry vehicle has moved so far that it is no longer in the field of view of radar.

So I think what was misleading about that story—I mean, we all speak in analogies, but what was misleading about that story, which is often cited about how they can see a baseball across the country, is that they don't explain that if it were—if that baseball were moving as fast as a reentry vehicle would be moving, that indeed the radar couldn't do that.

Mr. TIERNEY. Thank you. I was following in the Boston Globe two things. One is the paper editorialized on April 8th about the Bush-Putin summit. And apparently then Rick Lehner, the Director of Public Affairs for the Missile Defense Agency, took great issue because he thought, at least in his reading, that they took issue with the missile defense technology and he thought they asserted that it doesn't work. So he wrote a letter back to them saying that he really believes they just don't understand.

And he says: The first successful intercept test from 1999 to 2002 used the type of decoys we could expect from countries such as North Korea and Iran, and future tests will introduce more challenging decoys to keep up with expected threats.

Is that true, that the first successful intercept test from 1999 to 2002 used the type of decoys that could be expected from countries such as North Korea and Iran?

Ms. GRONLUND. No.

Mr. TIERNEY. Why not?

Ms. GRONLUND. Because the decoys appeared very different from the warhead, and the system was also told what the warhead would look like. So they had very large balloons that had a very large infrared signature and a different radar signature from the warhead. I mean, the point of having a decoy is—yeah. OK.

Mr. TIERNEY. I mean, it is this kind of statement that probably bothers Mr. Shays and I, is that we want to find out where the system is at and we want to find out whether it should be tested or whatever. Misstatements and exaggerations aren't helpful on that point. He goes on to say——

Mr. SHAYS. Could I just jump in here?

Mr. TIERNEY. Sure.

Mr. SHAYS. The challenge, though, is that they are not here.

Mr. TIERNEY. They will be.

Mr. SHAYS. I know they will. But what my view is, it would be nice to have them here to counter any time—it would make the dialog more interesting, I think.

Mr. TIERNEY. Well, they won't sit on the panel with other people, because it has been the policy of the Department that they sapiently don't like to be challenged on their dialog. But they will be on another panel, and then we will have people following that panel so we can get as best we can.

Mr. SHAYS. Maybe we should ask them to stay to respond again. Anyway.

Mr. TIERNEY. This Mr. Lehner, who is the Public Affairs Director for the MDA, then goes on to say: As for how realistic the missile tests are, I am not certain what the Boston Globe means. For tests of the long-range system, we launch a target missile from Kodiak, AK, and then intercept the missile from Vandenberg Air Force Base in California. The trajectory closely replicates a launch at the United States from North Korea. We used an operational radar at Beale Air Force Base in California and the operational command and control system staffed by military operators from U.S. Northern Command, the same people who man the consoles 24/7.

Is that true, Dr. Coyle?

Mr. COYLE. Well, when they say they used the radar, if that means it was turned on, yes, that is true. But they didn't use the radar to tell the interceptor: You have picked the wrong target, go here.

First of all, they couldn't, because there wasn't a wrong target, there were no decoys on those tests. But if there had been, they didn't use the radar to say, no, go to this target instead of that one, you just picked the wrong one.

The other problem is, when Colonel Lehner speaks about the tests that were done in the early years, I am familiar with those tests. And the balloons, as has already been explained, were much bigger and brighter than the reentry vehicle. So they didn't resemble the reentry vehicle. And so the analogy that I used in my formal testimony was, yes, they discriminated between an elephant and a man, two things that don't resemble each other. That is what was done in those early tests.

The challenge of course is when the decoy actually resembles the reentry vehicle. Now you are trying to tell either two elephants or two men apart, and that is much tougher.

Mr. TIERNEY. And from my memory from the testimony and reading the written testimony, whatever, the National Intelligence Estimates, and the intelligence community expects that a country able to make a missile would be able to make decoys or whatever with current technology. They can either buy it from Russia or China, or they can make it themselves. So you would expect that they would be doing something at least sophisticated enough to resemble the missile itself.

Mr. COYLE. Yes, sir.

Mr. TIERNEY. Dr. Garwin.

Mr. GARWIN. Mr. Chairman, you mentioned the analogy of a radar in Chesapeake Bay and a baseball-sized target at San Francisco. Well, the job would be a lot easier if they were baseballs rather than reentry vehicles. Because, in our countermeasures volume on page 133, we consider a realistic reentry vehicle, and we assumed that, as the intelligence community says in their 1999 NIE, that these states have the ability to orient the reentry vehicle. So if the nose is pointing toward the radar or anywhere near toward the radar, the cross-section, the signal that comes back is not that from a baseball but from a marble, about a half inch in diameter.

So it can be very much reduced to be invisible to that radar. So that is really a misleading analogy.

Mr. TIERNEY. Colonel Lehner also says: The trajectory closely replicates a launch on the United States from North Korea. And he talks about the test of the long-range system. They launched the target missile from Kodiak, AK and intercepted the missile in Vandenberg Air Force Base, California.

Would that closely replicate a launch from North Korea, Dr. Coyle?

Mr. COYLE. Well, it is better than some early tests that didn't. But what would really represent that would be a test where the target was launched from Kodiak and the interceptor was in Kwajalein, not in California. That kind of distance would represent an ICBM, and they have never had a successful test. They have tried twice, but have never had a successful test of that.

Mr. TIERNEY. Mr. Shays, do you want to ask questions?

Mr. SHAYS. I am going to be leaving, and I just want to make sure. Mr. Kueter, you were not invited to respond to some of these questions. Is there anything that you wanted to say before?

Mr. KUETER. I would say that the description of the realism in these tests is one that you ought to explore in great detail with Dr. McQueary, who is the head of operational test and evaluation at the Defense Department, the person who is helping to design the criteria by which these tests are to be functioned. His statement, which I quoted from in my testimony to the Senate earlier this month, indicates tremendous progress in the realism of the testing program and the quality of the work that is being done. They are integrated in with the protocols that the Missile Defense Agency is being held to today. I think that would greatly illuminate this conversation about the contemporary program rather than our perceptions of what the program was.

Mr. SHAYS. In the end, wouldn't all of us agree that this, what is an operationally realistic, is a matter somewhat of a subjective judgment? Wouldn't that not be true? Not to discount any of the reservations. It is just to suggest that what is realistic to one may not be realistic to somebody else. And so it seems to me that we ultimately have to get the agents before us and have them defend what is realistic.

And what I would be seeking to learn from the agency would be, well, are there like 10 steps of realistic? I mean, you dealt with the one kind of case. But if you make it tougher, stage two, stage three, and four; and at what stage are they at realistic? But, I mean, that is kind of where I am coming down.

I mean, what I am finding helpful is that this is no longer in my mind whether we can hit a bullet on a bullet, but whether with decoys we can achieve what we need. And I can understand that the more decoys you have, the more sophisticated you have to make that weapon, that warhead and that missile. And then how realistic is that? So those are the kind of questions that I would be going to.

In the end, we may say it wasn't worth $200 billion or whatever. But then I look at it from the standpoint, if we have already spent $150 billion, is it realistic to continue based on the, what I call, the

marginal cost, the cost from this point on? Or should we just cut our losses and stop?

And then what I try to remember is that when we fought the first war in the Gulf, I was reminded—I was a new Member—that all of the systems that worked well for our troops, the ways that we were able to see them before they could see us and hit them before they hit us, those decisions were made by a Congress 10 years before I ever became a Member of Congress. But my constituents said, what a great job. We won the war in Kuwait, our troops did a great job. And they slapped me on the back. And I knew that really I had nothing to do with that. Those decisions were made by someone 10 years earlier.

So my concern is always the reservation that I say no to something that ultimately may stop a missile. And if it stops one or two missiles, then I am going to ask myself, was that worth $200 billion?

So what would be wrong is if people then have a false sense of security because of a missile system which could be—and then you do certain things that encourage someone to use a missile and then the system doesn't work.

So it works both ways, and I understand that. But I thank all the witnesses. I am very sorry I wasn't here earlier. I have not literally unpacked my two attache cases that I brought in when I came in this week. They are still sitting on my chair unpacked. So—anyway. Thank you.

Mr. TIERNEY. Thank you, Mr. Shays. Just on that point of what is operationally realistic, doesn't our intelligence community help define that? And we have a 1999 NIE that basically says that Iran could put whatever decoys were technologically capable at that time by whether it is Russia or China? So that defines for us what a realistic set would be. Am I off the base on that? Did I hear it correctly?

Ms. GRONLUND. I think that is right. I think there would also be value, as I suggested, in having a countermeasure Red Team, which there was for a while, and I don't know if it is still there.

Mr. TIERNEY. Dr. Coyle.

Mr. COYLE. Yes, Mr. Chairman. I don't think that the difference between an operationally realistic test and an early developmental test is something that is vague at all. I don't recall quite how Mr. Shays worded it, but I don't think that this is a subtle thing at all, the difference between early developmental tests and realistic operational tests.

Forget about decoys. Pretend there are never going to be any decoys, never going to be any countermeasures. You want the system to work at night. They have never shown that it can work at night. You want the system to work when the sun is shining in the eyes of the interceptor so that it makes it harder to see. It uses infrared sensors that are sensitive to that. You want it to work when there is more than one missile. Is Iran or North Korea going to fire just one missile and wait to see what happens?

I don't think those are subtle things at all, and they have yet to show those things in the testing programs.

Mr. SHAYS. What would be helpful to the committee I think would be for you and others to write a list of all the things that

you think would be realistic. In other words, before you deploy, let's do the one in the sun, let's do the multi. Whatever. And then I would like to submit that as a request maybe from both of us, and then we then ask them: How many of these have you in fact done? But that would be helpful. If you could submit that for the record, all the ways that they could make the tests more realistic.

Mr. TIERNEY. You weren't here earlier, but more to point with this thing would be to ask the MDA to give us a list of standards of what it is they are supposed to be trying to build. We don't even know what it is they are going to hit the point that they think they are there. We don't know what it is they are building, what they define as success, anything of that basis.

Mr. COYLE. And I did include in my full statement such a list.

Mr. SHAYS. Thank you.

Mr. TIERNEY. Now, I am going to try to go through this as quickly as I can. The Government Accountability Office is describing an EKV anomaly that has persisted in the GMD flight intercept test for 7 years, since 2001. If not corrected, this anomaly could cause the EKV to temporarily lock into the wrong target and miss the real target.

Can somebody explain that anomaly and the situation for us?

Mr. GARWIN. I don't know about it.

Mr. TIERNEY. Dr. Coyle, do you know about it?

Mr. COYLE. Yes, I do.

Mr. TIERNEY. Would you share that with us?

Mr. COYLE. Yes. There has been a problem with the EKV in tests ever since 2001, as the GAO reports. It is called an anomaly, which means that the EKV starts looking at the wrong thing and stays looking at the wrong thing. And if it keeps doing that too long, it is going to miss the target. And, fortunately, while they have had some tests that failed, none of them have failed for that particular reason, that the anomaly has only persisted for a short while and not long enough that was the reason that they missed when they missed.

But, obviously, this is something that has to be fixed, and the Missile Defense Agency has been trying to fix it. But through one problem or another, as I explained in my full statement, to this day they still haven't been able to get to what the root cause of this problem is. They know that it keeps happening. They have taken steps such as improved electrical shielding to make it go away. They believe they have minimized the problem, but they also see even in the most two recent tests that have taken place that this problem is still there.

I am not trying to make a big deal out of it. It is just one of many little things that have to be chased down. But I think it is an interesting example, that even solving one little problem like this one anomaly has taken 7, 8 years, and it is still isn't solved.

Mr. TIERNEY. The SBIRS High, and the Space Tracking and Surveillance System [STSS], are they components necessary for the Ground-based Midcourse System we are talking about?

Mr. COYLE. Yes, sir.

Mr. TIERNEY. Do they exist?

Mr. COYLE. No. They are being developed, but they don't exist. They are not on orbit in that sense.

Mr. TIERNEY. If they are necessary for the system and they don't exist, then we certainly couldn't have had any realistically operational tests, because they are even not here. Right?

Mr. COYLE. Exactly. And I have been surprised at some of the claims that have been made about the capabilities of the system, considering that those satellite systems are not even in there, not on orbit yet, and many years before they will be.

Mr. TIERNEY. How many years, do you think?

Mr. COYLE. Well, it is hard to say. They are years behind schedule and literally tens of billions of dollars over budget. But if, as the Missile Defense Agency sometimes claims, we have operational capability without them. Why do we need them? And if we need them, how can we—you know.

Mr. TIERNEY. Mr. Kueter, do you want to answer that? If we have operational capability without them, why do we need them?

Mr. KUETER. Well, you need the STSS system to help you deal with your complex countermeasures problem, which is why they are developing it, why they need to deploy it: For the purpose of dealing with the rudimentary threat that they believe they face from North Korea and Iran. They don't see necessarily a need for it right now to solve the mission of the initial defense that they were given by the Congress and the President.

Mr. TIERNEY. If our intelligence agencies think that Iran would have whatever decoy capability China or Russia might have, why does it make sense for our MDA people to be telling us they just think some rudimentary system would be there? They want to give them all of the credit of being able to send a missile at us, but none of the credit of being able to do even the most basic and fundamental decoys.

Mr. KUETER. As I think I mentioned, the NIE certainly indicates that they would have access to that technology, not that they have necessarily mastered it or are able to deploy it effectively on their own.

Mr. TIERNEY. But the general consensus seems to be that a country that can build a missile could certainly build decoys.

Mr. KUETER. That they could build them, not that they have mastered their use or that they would be able to work effectively in an offensive environment.

Mr. TIERNEY. So we are again assuming that they are certainly the masters of building a missile but not the masters of building a decoy. We seem to make assumptions that go every which way, but always in a way that——

Mr. KUETER. No. No, sir. And I don't believe that the Agency would agree with that, either. That is why they are planning tests against countermeasures and the four or five tests that are planned over the next 2 years. They understand the need to test against countermeasures for all the reasons that have been discussed here today.

The question is, particularly as it pertains to STSS, is whether you need it uniquely to do the discrimination job, or whether the X-band radars and the other sensors already available to us can help do that job as it stands. They appear to be confident that the seeker on the kill-vehicle in combination with those radars can do

the discrimination job. We will learn that over the course of the next 2 years as these flight tests take place.

Mr. TIERNEY. Are you telling me the SBIR High system will be done in the next couple of years?

Mr. KUETER. No, sir. It certainly will not.

Mr. TIERNEY. Are you telling me that Space Tracking and Surveillance System will be done in the next couple of years?

Mr. KUETER. No, sir. You need that to handle a complex countermeasures environment, one where you have very sophisticated countermeasures deployed. I don't even think the NIE would confirm that North Korea or Iran have access to that kind of capability, at least not at this time period. You have to project out when you think the STSS will be put on orbit. That might coincide with their acquisition of that capability, in which case we would have a very happy outcome.

Mr. TIERNEY. Our intelligence won't confirm that they have a missile either. But the presumption here is that when they get ready to have a missile, that they will no doubt be ready to arm it with sufficiently sophisticated decoys.

Mr. KUETER. We know they have a missile.

Mr. TIERNEY. Am I off base?

Ms. GRONLUND. I mean, the point of our study was to look at things that were far, far simpler than building a missile and a nuclear warhead. I think some people could do it in their garage. I mean, Mylar balloons are not that hard to do. So I don't actually even know what is meant by a sophisticated countermeasure. The things that are described in the NIE, the things that we looked at are not sophisticated.

Mr. TIERNEY. Would we need a SBIRS High or a Space Tracking Surveillance System to do the Mylar balloons?

Ms. GRONLUND. Well, it wouldn't help you. Again, we assumed we had that system when we did that analysis. You can make these balloons have a variety of temperatures by coating them with different colors of paint, take your pick, over a range of hundreds of degrees Fahrenheit or centigrade for that matter.

Mr. TIERNEY. Would radar help you discriminate between those?

Ms. GRONLUND. No.

Mr. GARWIN. I think Mr. Kueter misspoke. He said we know they have the missile. The North Koreans certainly don't have a missile even if they were successful with their TB–2 that could carry a nuclear warhead to the United States. And Iran is far from having such a missile.

Speaking of realism, I asked in my testimony on page 11 a question for the Missile Defense Agency. And it is: Does MDA believe that threat is not realistic? That is, the threat of ICBMs equipped with scores of bomblet RVs, reentry vehicles, that separate just after boost phase.

So can they defend against that? If they can't defend against that, is it because they think that threat is not realistic? Because the intelligence community does believe it is realistic, we deployed and others deployed ballistic missiles equipped with bomblet warheads for dispensing chemical and biological munitions in the days in which we had such capabilities.

Mr. TIERNEY. Back in 2003, in March, Pete Aldridge, who was then the U.S. Under Secretary of Defense for Acquisition, Technology, and Logistics, told Senator Bayh out of Indiana, that as of that date, March 18, 2003, the projected effectiveness of the system would be in the 90 percent range. That was with respect to deployment against a North Korean missile launched at the United States.

Is there any prospect that was true, that statement? Mr. Kueter.

Mr. KUETER. In 2003?

Mr. TIERNEY. March 18, 2003, that there was—as of today, the projected effectiveness would be in the 90 percent range.

Mr. KUETER. I have no way of knowing what kind of data he had available to him at that time.

Mr. TIERNEY. Based on the data that you knew about at that point in time, would that have been an accurate statement?

Mr. KUETER. That is probably an overstatement.

Mr. TIERNEY. Probably. Dr. Gronlund.

Ms. GRONLUND. He didn't have any data because there was no data.

Mr. TIERNEY. Dr. Garwin.

Mr. GARWIN. I don't know what he had in mind. And when he said would be 90 percent, I don't know whether he meant a launch in 2003 could be countered with 90 percent effectiveness——

Mr. TIERNEY. He said, as of today. That would be March 18, 2003. As of March 18, 2003, the projected effectiveness of the system to be deployed in 2004 would be against a North Korean missile launched at the United States would be in the range of 90 percent.

Mr. GARWIN. So, in 2004, when it was deployed. No, I think that is considerable overstatement.

Mr. TIERNEY. I think we have probably tortured you all sufficiently for the day. There are probably more questions that we may have to followup, if that is all right with you folks. I think we have covered a lot of ground here today and really extended your day far beyond what would have been realistic for you to take in such good humor.

I want to thank you. I think you have helped us create a record and helped us at least educate ourselves for further hearings as we try to explore this issue. I thank you sincerely for coming in, and I look forward to your further advice and counsel as we move forward on this, and invite you to work with our staff if they could be helpful in lightening the load of anything that was requested of you from Mr. Shays or from me as that move forwards, and thank you very, very much.

The meeting is adjourned.

[Whereupon, at 6:50 p.m., the subcommittee was adjourned.]

○